Series AV05

AVENTICS™ Series AV05

EMERSON.

AV05 series valve system

- Configurable valve systems, Multipole, Fieldbus, IO-Link, AV03/AV05, AV03/AV05/HF02-LG, ATEX optional

Blocking principle	Combination of double and triple base plate principles
Working pressure min./max.	-0.95 ... 10 bar
Control pressure min./max.	3 ... 8 bar
Ambient temperature min./max.	-10 ... 60 °C
Medium temperature min./max.	-10 ... 60 °C
Medium	Compressed air
Max. particle size	40 µm
Oil content of compressed air	0 ... 5 mg/m³
Nominal flow Qn	700 l/min
Operational voltage electronics	24 V DC
Number of valve positions max.	64
Protection class with connection	IP65
Voltage tolerance DC	-10% / +10%

An example configuration is illustrated. The delivered product may thus deviate from the illustration.

Overview of variants

	Version	You have the following options:	Max.
	Multipole	D-Sub plug, 25-pin, top D-Sub plug, 44-pin, top	24 valves (24 coils) 36 valves (40 coils)
	Multipole	D-Sub plug, 25-pin, on the side D-Sub plug, 44-pin, on the side	24 valves (24 coils) 36 valves (40 coils)
	IO-Link	type A type B	24 valves (24 coils)
	Fieldbus connection with I/O functionality (AES)	PROFINET IO EtherCAT EtherNET/IP POWERLINK PROFIBUS DP CANopen DeviceNet	64 valves (128 coils)
	AV03/AV05 in combination	D-Sub plug, 25-pin D-Sub plug, 44-pin IO-Link PROFINET IO EtherCAT EtherNET/IP POWERLINK PROFIBUS DP CANopen DeviceNet	24 valves (24 coils) 36 valves (40 coils) 24 valves (24 coils) 64 valves (128 coils)
	AV03 / AV05 / HF02-LG in combination	D-Sub plug, 25-pin, on the side D-Sub plug, 44-pin, on the side IO-Link PROFINET IO EtherCAT EtherNET/IP POWERLINK PROFIBUS DP CANopen DeviceNet	24 valves (24 coils) 36 valves (40 coils) 24 valves (24 coils) 64 valves (128 coils)

	Version	You have the following options:	Max.
	ATEX	D-Sub plug, 25-pin, top D-Sub plug, 44-pin, top D-Sub plug, 25-pin, on the side D-Sub plug, 44-pin, on the side PROFINET IO EtherCAT EtherNET/IP POWERLINK PROFIBUS DP CANopen DeviceNet	24 valves (24 coils) 36 valves (36 coils) 24 valves (24 coils) 36 valves (36 coils) 22 valves (22 coils)

Technical information

The min. control pressure must be adhered to, since otherwise faulty switching and valve failure may result!
The pressure dew point must be at least 15 °C under ambient and medium temperature and may not exceed 3 °C .
The oil content of compressed air must remain constant during the life cycle.
Use only the approved oils from AVENTICS. Further information can be found in the “Technical information” document (available in the MediaCentre).
UL certification

When using polyurethane tubing, we recommend using additional stiffener sleeves.
For push-in fittings, only use plug accessories made of plastic (polyamide) from our catalog.
The combination of double and triple base plates allows a configuration in increments of 1.
See the following pages on the series for technical data on individual components.
See the Media Centre for information on pin assignment (version A and version B) of the D-Sub connector.
For assembly in a control cabinet with direct sealing or when using transition plates, a supply plate must be configured after 8 valves
ATEX:
AV valve systems are certified components in accordance with directive 2014/34/EU
The maximum input power must not exceed 20 W.
The valve system must be installed in an ATEX-certified control cabinet with at least IP 54.
The maximum expansion stage is set in the configurator.
Min./max. ambient temperature -10 ... 45 °C
Min./max. medium temperature -10 ... 45 °C
ATEX-certified valve systems with identification II 3G Ex nA IIC Gc can be generated in the Internet configurator.

Technical information

Material	
End plate	Polyamide fiber-glass reinforced
Base plate	Polyamide fiber-glass reinforced
Supply plate	Aluminum, Polyamide fiber-glass reinforced

Dimensions

Dimensions in mm, D-Sub plug, 25-pin, 44-pin, top

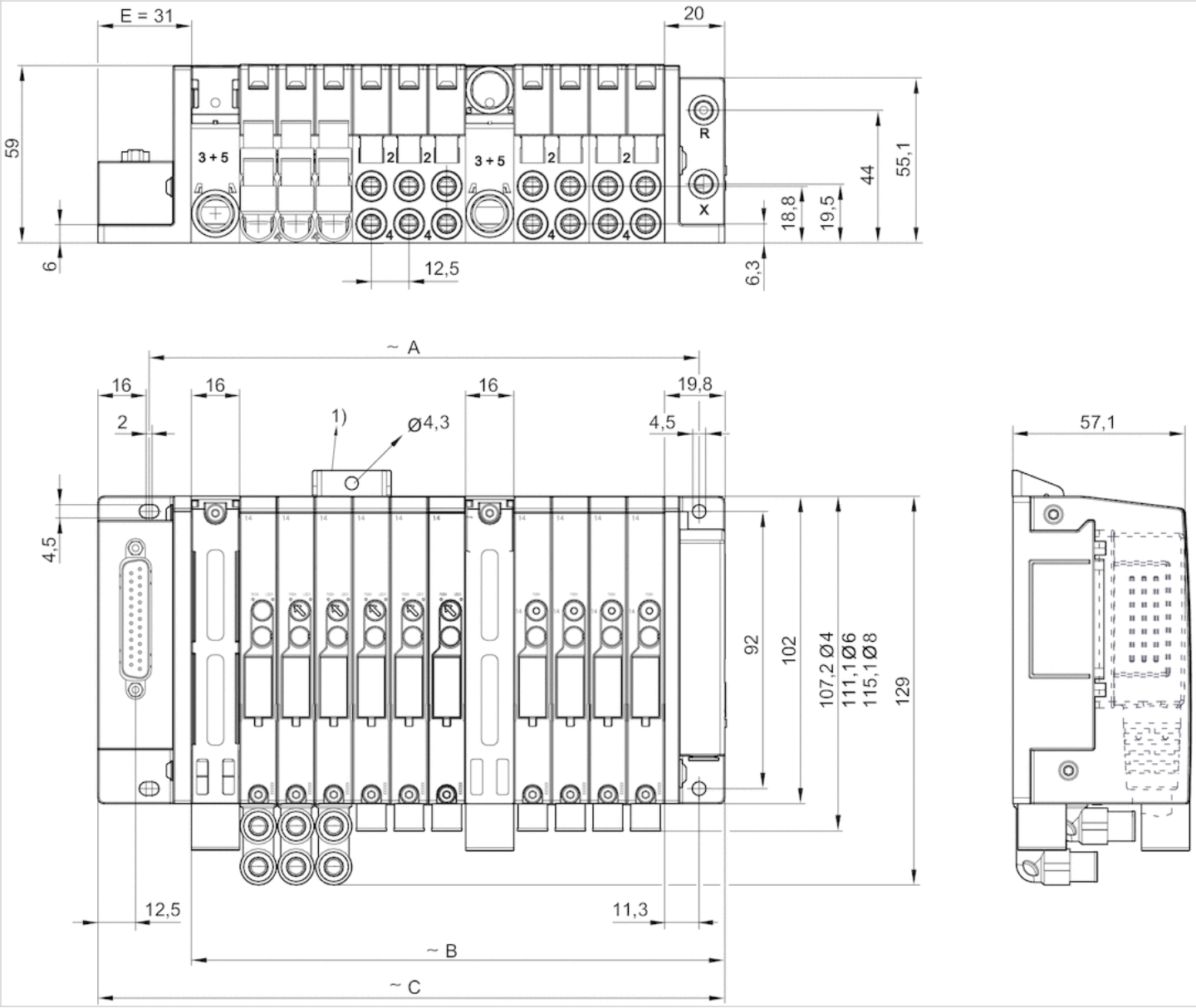

1) Retaining bracket (optional)
A = number of valve positions x 12.5 mm + number of supply plates x 16 mm + 25.5 mm
B = number of valve positions x 12.5 mm + number of supply plates x 16 mm + 20 mm
C = number of valve positions x 12.5 mm + number of supply plates x 16 mm + 51 mm
The supply plate in front of the first valve must be taken into consideration in the dimensions.
1 = push-in fitting Ø12 mm. Connection angle 1: straight (exchangeable fittings)
2 and 4 = push-in fitting Ø6 mm and Ø8 mm. Connection angle: straight and 90° (exchangeable fittings)
3 und 5 = push-in fitting Ø12 mm. Connection angle: straight
R = collected pilot exhaust air, push-in fitting Ø6 mm. Connection angle: straight
X = external pilot, push-in fitting Ø6 mm. Connection angle: straight
An example configuration is shown. You can calculate the dimensions for your configuration using the formula or read them directly in the configurator.

Dimensions in mm, D-Sub plug, 25-pin, 44-pin, on the side

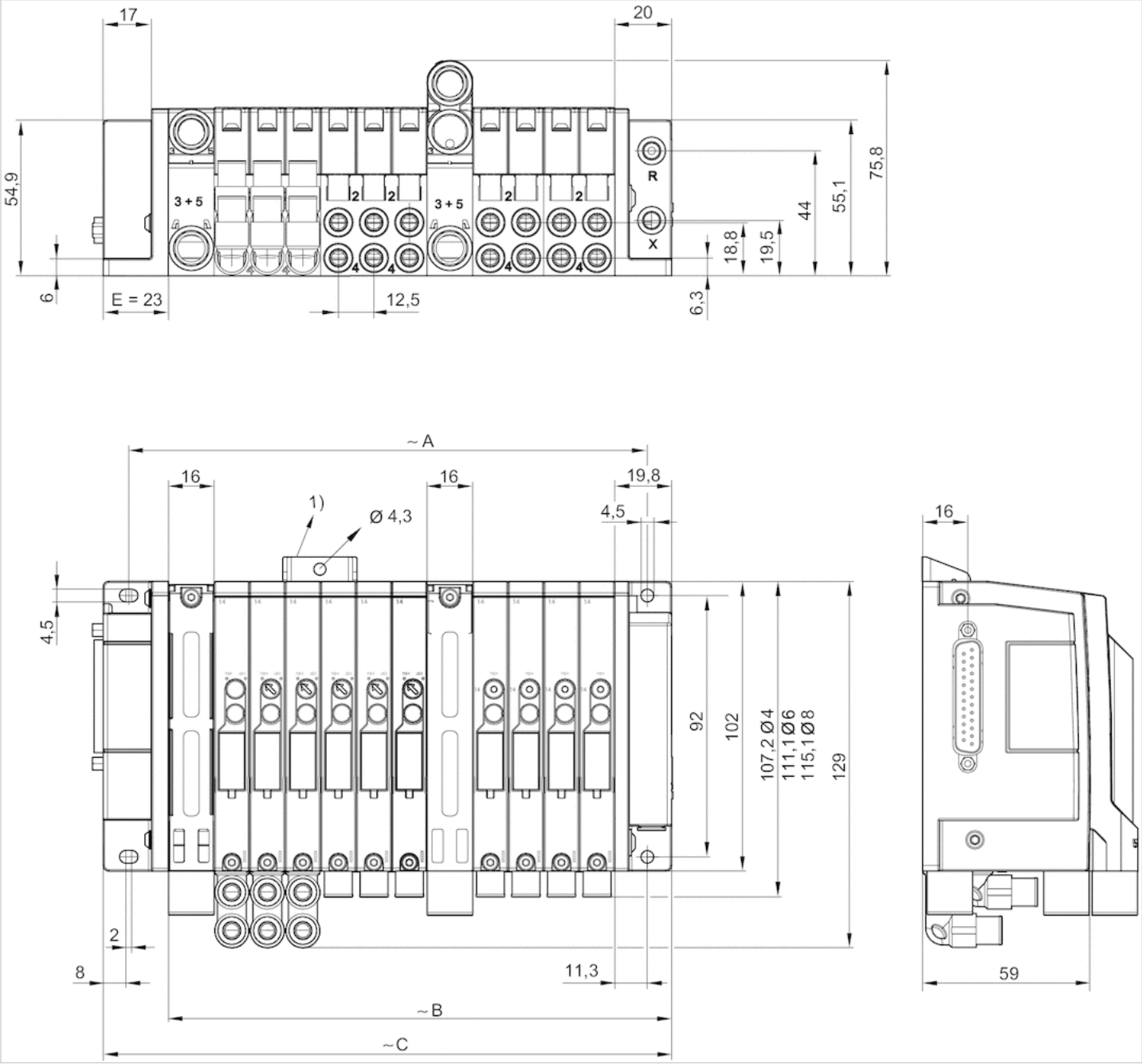

1) Retaining bracket (optional)
A = number of valve positions x 12.5 mm + number of supply plates x 16 mm + 25.5 mm
B = number of valve positions x 12.5 mm + number of supply plates x 16 mm + 20 mm
C = number of valve positions x 12.5 mm + number of supply plates x 16 mm + 43 mm
The supply plate in front of the first valve must be taken into consideration in the dimensions.
1 = push-in fitting Ø12 mm. Connection angle 1: straight (exchangeable fittings)
2 and 4 = push-in fitting Ø6 mm and Ø8 mm. Connection angle: straight and 90° (exchangeable fittings)
3 und 5 = push-in fitting Ø12 mm. Connection angle: straight
R = collected pilot exhaust air, push-in fitting Ø6 mm. Connection angle: straight
X = external pilot, push-in fitting Ø6 mm. Connection angle: straight
An example configuration is shown. You can calculate the dimensions for your configuration using the formula or read them directly in the configurator.

Dimensions in mm, IO-Link

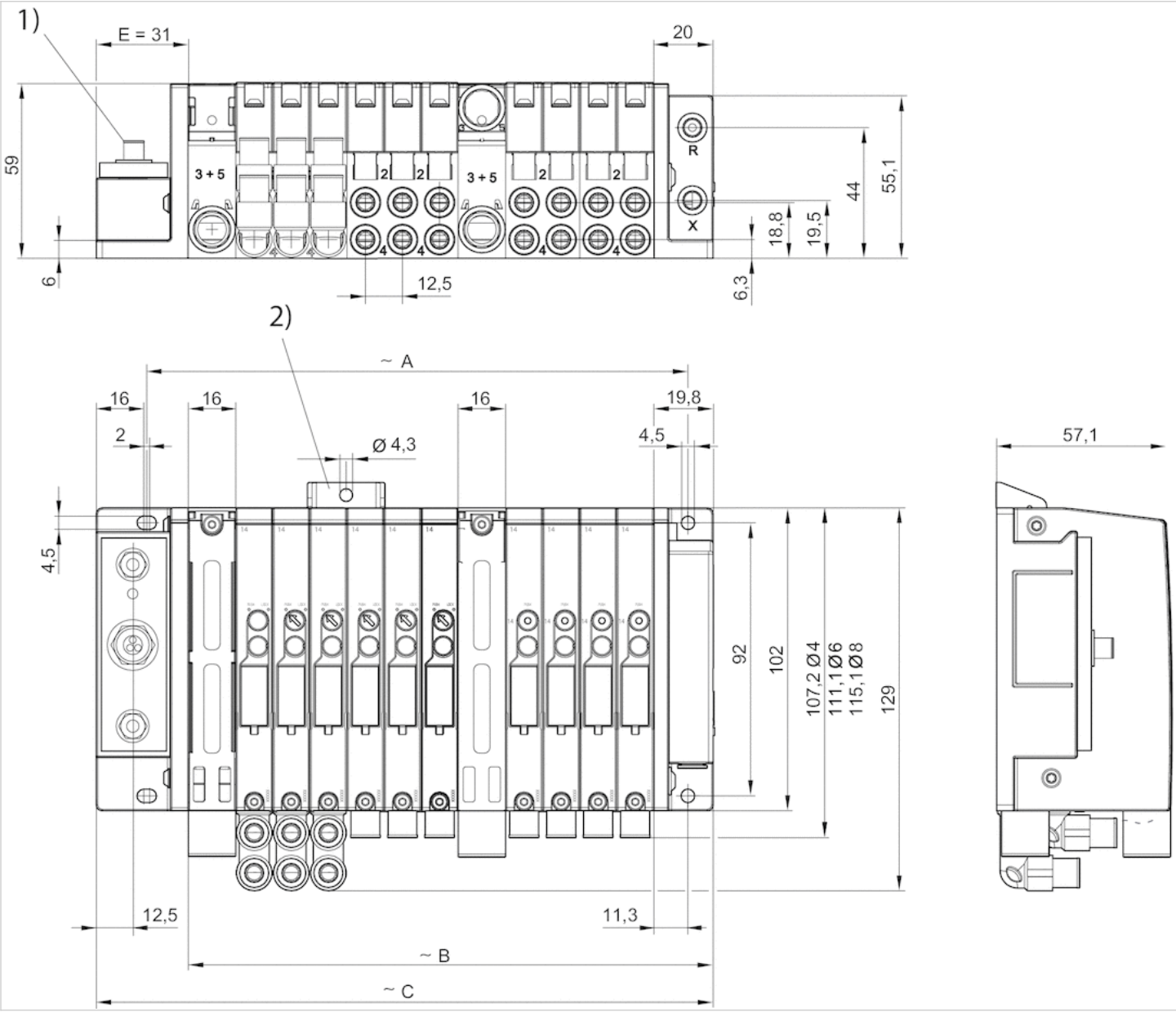

1) IO-Link
2) Retaining bracket (optional)
A = number of valve positions x 12.5 mm + number of supply plates x 16 mm + 25.5 mm
B = number of valve positions x 12.5 mm + number of supply plates x 16 mm + 20 mm
C = number of valve positions x 12.5 mm + number of supply plates x 16 mm + 43 mm
The supply plate in front of the first valve must be taken into consideration in the dimensions.
1 = push-in fitting Ø12 mm. Connection angle 1: straight (exchangeable fittings)
2 and 4 = push-in fitting Ø6 mm and Ø8 mm. Connection angle: straight and 90° (exchangeable fittings)
3 und 5 = push-in fitting Ø12 mm. Connection angle: straight
R = collected pilot exhaust air, push-in fitting Ø6 mm. Connection angle: straight
X = external pilot, push-in fitting Ø6 mm. Connection angle: straight
An example configuration is shown. You can calculate the dimensions for your configuration using the formula or read them directly in the configurator.

Dimensions in mm, Fieldbus connection with I/O functionality (AES)

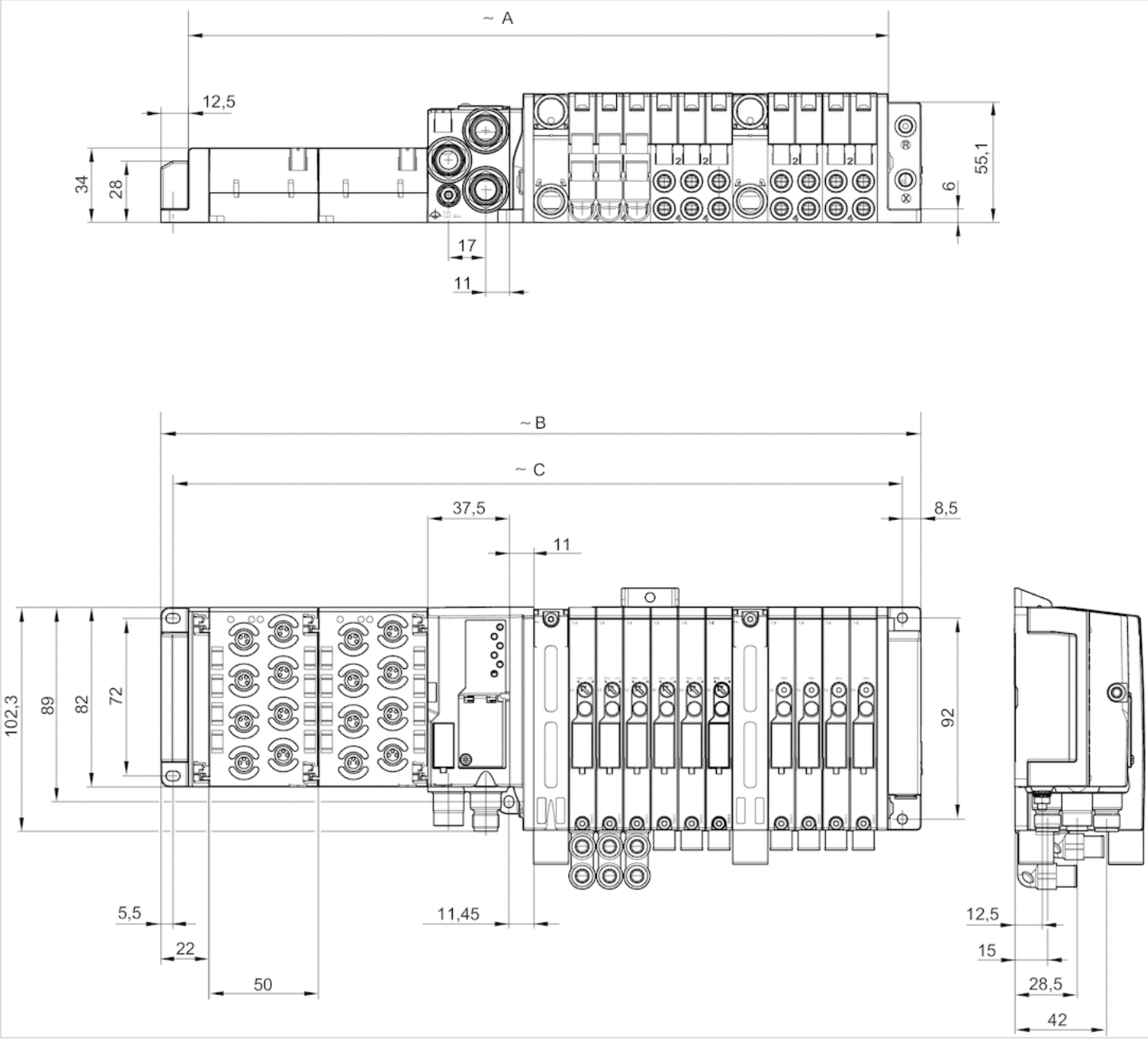

A = number of valve positions x 12.5 mm + number of supply plates x 16 mm + number of I/O x 50 mm + 63 mm
B = number of valve positions x 12.5 mm + number of supply plates x 16 mm + number of I/O x 50 mm + 90.5 mm
C = number of valve positions x 12.5 mm + number of supply plates x 16 mm + number of I/O x 50 mm + 76.5 mm
The supply plate in front of the first valve must be taken into consideration in the dimensions.
1 = push-in fitting Ø12 mm. Connection angle 1: straight (exchangeable fittings)
2 and 4 = push-in fitting Ø6 mm and Ø8 mm. Connection angle: straight and 90° (exchangeable fittings)
3 und 5 = push-in fitting Ø12 mm. Connection angle: straight
R = collected pilot exhaust air, push-in fitting Ø6 mm. Connection angle: straight
X = external pilot, push-in fitting Ø6 mm. Connection angle: straight
An example configuration is shown. You can calculate the dimensions for your configuration using the formula or read them directly in the configurator.

Dimensions, AV03/AV05 in combination

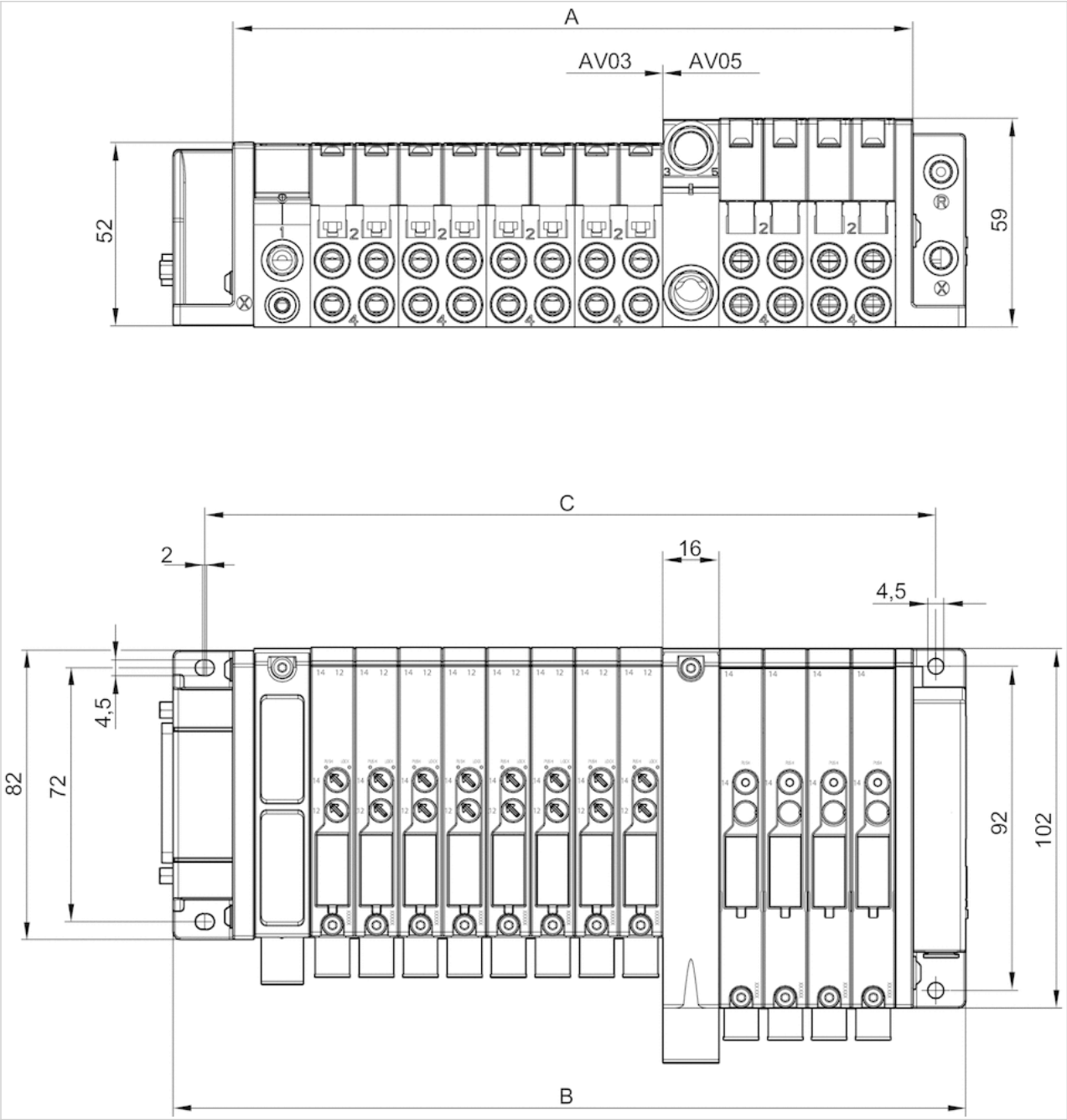

D-Sub plug, top or side
A = number of valve positions x 12.5 mm + number of supply plates x 16 mm + 11 mm
B = number of valve positions x 12.5 mm + number of supply plates x 16 mm + 43 mm
C = number of valve positions x 12.5 mm + number of supply plates x 16 mm + 25.5 mm
Bus coupler
A = number of valve positions x 12.5 mm + number of supply plates x 16 mm + number of I/O x 50 mm + 63 mm
B = number of valve positions x 12.5 mm + number of supply plates x 16 mm + number of I/O x 50 mm + 90.5 mm
C = number of valve positions x 12.5 mm + number of supply plates x 16 mm + number of I/O x 50 mm + 76.5 mm
The supply plate in front of the first valve must be taken into consideration in the dimensions.
1 = push-in fitting Ø12 mm. Connection angle 1: straight (exchangeable fittings)
2 and 4 = push-in fitting Ø6 mm and Ø8 mm. Connection angle: straight and 90° (exchangeable fittings)
3 und 5 = push-in fitting Ø12 mm. Connection angle: straight
R = collected pilot exhaust air, push-in fitting Ø6 mm. Connection angle: straight
X = external pilot, push-in fitting Ø6 mm. Connection angle: straight

Dimensions AV-BP

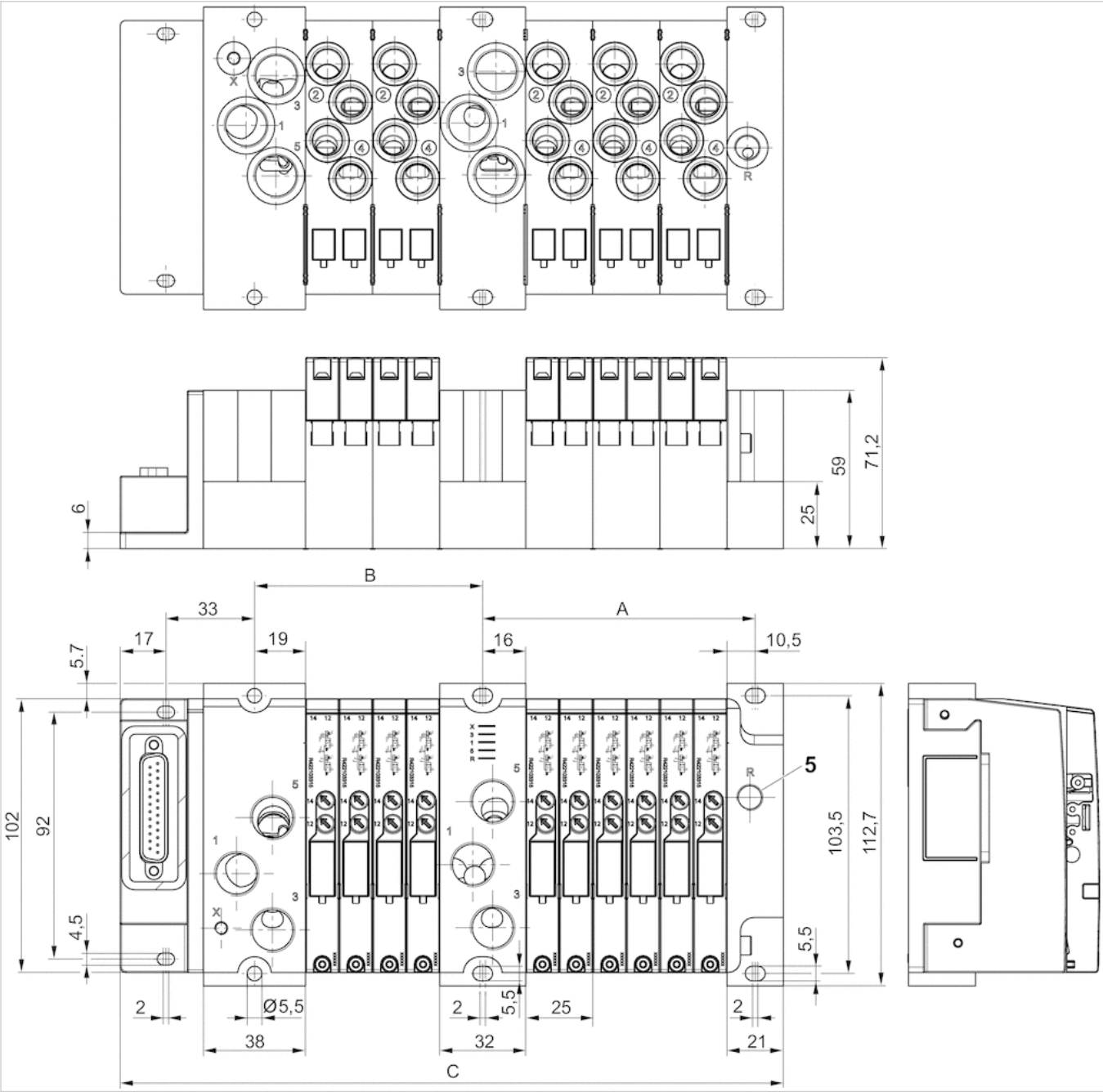

A = number of valve positions x 12.5 mm + 26.5 mm
B = number of valve positions x 12.5 mm + 35 mm
D-SUB: C = number of valve positions x 12.5 mm + number of I/Os x 32 mm + 90 mm
AES: C = number of valve positions x 12.5 + number of I/Os x 32 + number of I/Os x 50 + 129.
Connections 1, 3, 5 on bottom: G3/8, depth 10.5 mm, max. external push-in fitting diameter: 24 mm
Connections 1, 3, 5 on top: G3/8, depth 12 mm, max. external push-in fitting diameter: 24 mm
Connection X: M5, depth 8 mm, max. external push-in fitting diameter: 12 mm

2x2/2-directional valve, Series AV05

- 2x2/2
- Qn = 580 l/min
- NC/NC
- Plate connection
- Manual override : with detent
- double solenoid
- With spring return
- Pilot : External

Version	Spool valve, positive overlapping
Activation	Electrically
Pilot	External
Sealing principle	Soft sealing
Blocking principle	Base plate principle, multiple
Working pressure min./max.	-0.9 ... 10 bar
Control pressure min./max.	3 ... 8 bar
Ambient temperature min./max.	-10 ... 60 °C
Medium temperature min./max.	-10 ... 60 °C
Medium	Compressed air
Max. particle size	40 µm
Oil content of compressed air	0 ... 5 mg/m³
Nominal flow Qn	580 l/min
Pilot control exhaust	with directional pilot air exhaust
Protection class with connection	IP65
Protective circuit	Z-diode
Reverse polarity protection	Protected against polarity reversal
LED status display	Yellow
Duty cycle	100 %
Typ. switch-on time	16 ms
Typ. switch-off time	20 ms
mounting screws	Hexalobular socket (TORX) ISO 10664-8
Mounting screw tightening torque	0.5 Nm
Weight	0.05 kg

Technical data

Part No.		MO		Operational voltage	Voltage tolerance
				DC	DC
R422103315			NC/NC	24 V	-10% / +10%
R422103316			NC/NC	24 V	-10% / +10%
R422103317		—	NC/NC	24 V	-10% / +10%

Part No.	Power consumption	Flow conductance	Flow conductance
	DC	b	C-value
R422103315	0.55 W	0.29	1.17 l/(s*bar)
R422103316	0.55 W	0.29	1.17 l/(s*bar)
R422103317	0.55 W	0.29	1.17 l/(s*bar)

Nominal flow Qn at 6 bar and Δp = 1 bar, MO = Manual override

Technical information

The min. control pressure must be adhered to, since otherwise faulty switching and valve failure may result!
The pressure dew point must be at least 15 °C under ambient and medium temperature and may not exceed 3 °C .
The oil content of compressed air must remain constant during the life cycle.
Use only the approved oils from AVENTICS. Further information can be found in the “Technical information” document (available in the MediaCentre).

Technical information

Material	
Housing	Polyamide fiber-glass reinforced
Seals	Acrylonitrile butadiene rubber Hydrogenated acrylonitrile butadiene rubber
Front plate	Polyamide fiber-glass reinforced
End plate	Polyamide

Dimensions

Dimensions

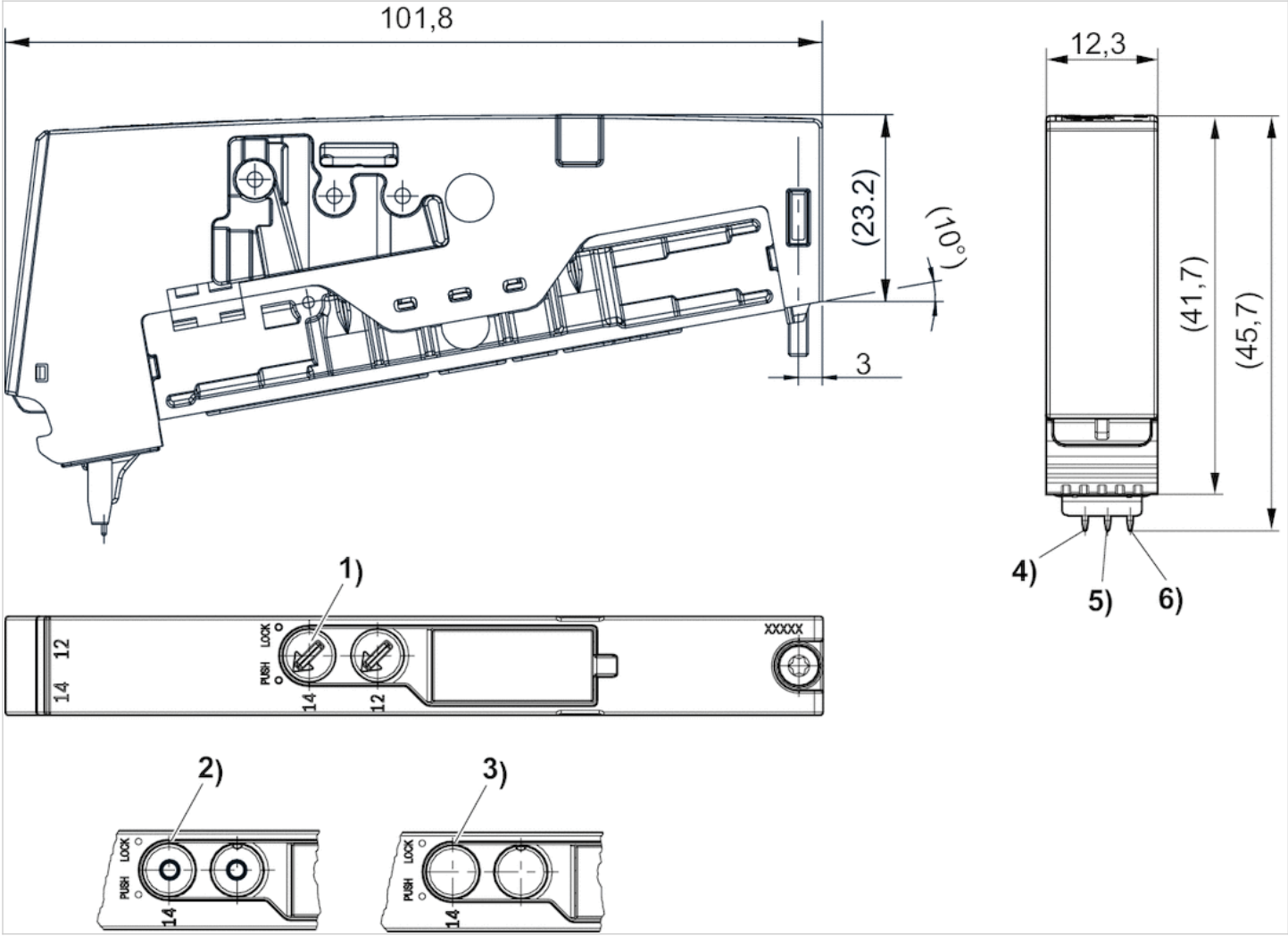

1) Manual override: with detent
2) manual override: without detent
3) Manual override: without detent
4) Coil 12
5) Coil 14
6) Ground

Diagrams

Control pressure: see diagram for min., max. 8 bar

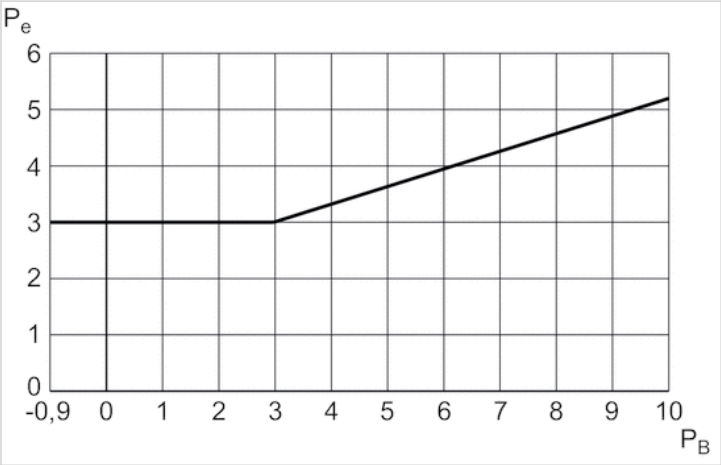

PB= Working pressure
Pe = external control pressure, min.

2x3/2-directional valve, Series AV05

- 2x3/2
- Qn = 600-650 l/min
- NC/NC NO/NO NC/NO
- Plate connection
- Manual override : with detent without detent without
- double solenoid
- Pilot : External

Version	Spool valve, positive overlapping
Activation	Electrically
Pilot	External
Sealing principle	Soft sealing
Blocking principle	Base plate principle, multiple
Working pressure min./max.	-0.9 ... 10 bar
Control pressure min./max.	3 ... 8 bar
Ambient temperature min./max.	-10 ... 60 °C
Medium temperature min./max.	-10 ... 60 °C
Medium	Compressed air
Max. particle size	40 µm
Oil content of compressed air	0 ... 5 mg/m³
Nominal flow Qn	See table below
Nominal flow 1 ▸ 2	See table below
Nominal flow 2 ▸ 3	520 l/min
Pilot control exhaust	With collective pilot air exhaust
Protection class with connection	IP65
LED status display	Yellow
Duty cycle	100 %
Typ. switch-on time	16 ms
Typ. switch-off time	25 ms
mounting screws	Hexalobular socket (TORX) ISO 10664-8
Mounting screw tightening torque	0.5 Nm
Tightening torque tolerance	±0,1 mT
Weight	See table below

Technical data

Part No.		MO		Operational voltage	Voltage tolerance
				DC	DC
R422103006			NC/NC	24 V	-10% / +10%
R422103007			NC/NC	24 V	-10% / +10%
R422103080		–	NC/NC	24 V	-10% / +10%
R422103008			NO/NO	24 V	-10% / +10%
R422103009			NO/NO	24 V	-10% / +10%
R422103081		–	NO/NO	24 V	-10% / +10%
R422103010			NC/NO	24 V	-10% / +10%
R422103011			NC/NO	24 V	-10% / +10%
R422103082		–	NC/NO	24 V	-10% / +10%

Part No.	Power consumption	Flow conductance	Flow conductance	Nominal flow Qn
	DC	b	C-value	
R422103006	0.55 W	0.38	2.46 l/(s*bar)	650 l/min
R422103007	0.55 W	0.38	2.46 l/(s*bar)	650 l/min
R422103080	0.55 W	0.38	2.46 l/(s*bar)	650 l/min
R422103008	0.55 W	0.45	2.07 l/(s*bar)	600 l/min
R422103009	0.55 W	0.45	2.07 l/(s*bar)	600 l/min
R422103081	0.55 W	0.45	2.07 l/(s*bar)	600 l/min
R422103010	0.55 W	0.45	2.07 l/(s*bar)	650 l/min
R422103011	0.55 W	0.45	2.07 l/(s*bar)	650 l/min
R422103082	0.55 W	0.45	2.07 l/(s*bar)	650 l/min

Part No.	Nominal flow 1 ▸ 2	Weight
R422103006	650 l/min	0.066 kg
R422103007	650 l/min	0.066 kg
R422103080	650 l/min	0.066 kg
R422103008	600 l/min	0.064 kg
R422103009	600 l/min	0.064 kg
R422103081	600 l/min	0.064 kg
R422103010	650 l/min	0.065 kg
R422103011	650 l/min	0.065 kg
R422103082	650 l/min	0.065 kg

Nominal flow Qn at 6 bar and Δp = 1 bar, MO = Manual override

Technical information

The min. control pressure must be adhered to, since otherwise faulty switching and valve failure may result!
The pressure dew point must be at least 15 °C under ambient and medium temperature and may not exceed 3 °C .
The oil content of compressed air must remain constant during the life cycle.
Use only the approved oils from AVENTICS. Further information can be found in the “Technical information” document (available in the MediaCentre).

Technical information

Material	
Housing	Polyamide fiber-glass reinforced
Seals	Acrylonitrile butadiene rubber Hydrogenated acrylonitrile butadiene rubber
End plate	Polyamide fiber-glass reinforced

Dimensions

Dimensions

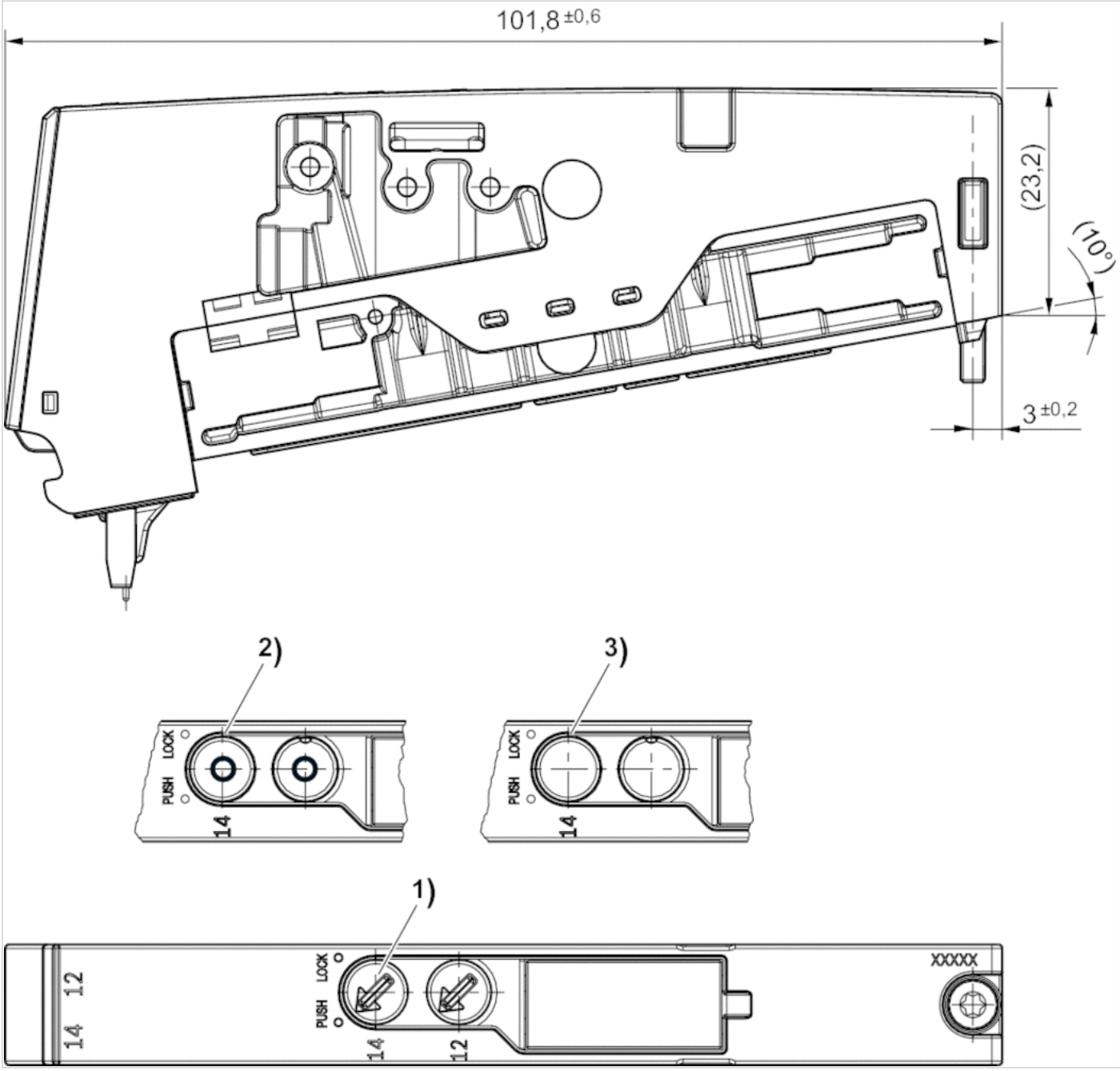

1) Manual override: with detent
2) manual override: without detent
3) Manual override: without detent

Diagrams

Control pressure: see diagram for min., max. 8 bar

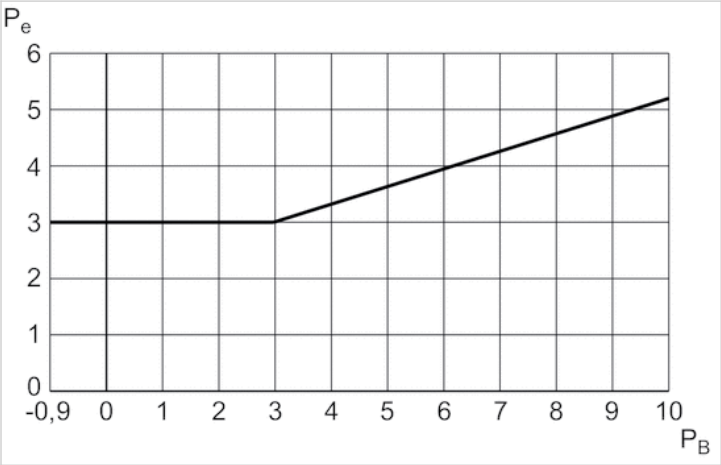

PB= Working pressure
Pe = external control pressure, min.

5/2-directional valve, Series AV05

- 5/2
- Qn = 700 l/min
- Plate connection
- Manual override : with detent without detent without
- single solenoid double solenoid
- Pilot : External

Version	Spool valve, positive overlapping
Activation	Electrically
Pilot	External
Sealing principle	Soft sealing
Blocking principle	Base plate principle, multiple
Working pressure min./max.	-0.9 ... 10 bar
Control pressure min./max.	3 ... 8 bar
Ambient temperature min./max.	-10 ... 60 °C
Medium temperature min./max.	-10 ... 60 °C
Medium	Compressed air
Max. particle size	40 µm
Oil content of compressed air	0 ... 5 mg/m³
Nominal flow Qn	700 l/min
Nominal flow 1 ▸ 2	700 l/min
Nominal flow 2 ▸ 3	600 l/min
Pilot control exhaust	With collective pilot air exhaust
Protection class with connection	IP65
LED status display	Yellow
Duty cycle	100 %
mounting screws	Hexalobular socket (TORX) ISO 10664-8
Mounting screw tightening torque	0.5 Nm
Tightening torque tolerance	±0,1 mT
Weight	See table below

Technical data

Part No.		MO	Operational voltage	Voltage tolerance
			DC	DC
R422103000			24 V	-10% / +10%
R422103001			24 V	-10% / +10%
R422103077		–	24 V	-10% / +10%
R422103012			24 V	-10% / +10%
R422103013			24 V	-10% / +10%
R422103083		–	24 V	-10% / +10%
R422103002			24 V	-10% / +10%
R422103003			24 V	-10% / +10%
R422103078		–	24 V	-10% / +10%

Part No.	Power consumption	Flow conductance	Flow conductance	Typ. switch-on time
	DC	b	C-value	
R422103000	0.55 W	0.38	2.54 l/(s*bar)	17 ms

Part No.	Power consumption	Flow conductance	Flow conductance	Typ. switch-on time
	DC	b	C-value	
R422103001	0.55 W	0.38	2.54 l/(s*bar)	17 ms
R422103077	0.55 W	0.38	2.54 l/(s*bar)	17 ms
R422103012	0.55 W	0.38	2.54 l/(s*bar)	16 ms
R422103013	0.55 W	0.38	2.54 l/(s*bar)	16 ms
R422103083	0.55 W	0.38	2.54 l/(s*bar)	16 ms
R422103002	0.55 W	0.38	2.54 l/(s*bar)	13 ms
R422103003	0.55 W	0.38	2.54 l/(s*bar)	13 ms
R422103078	0.55 W	0.38	2.54 l/(s*bar)	13 ms

Part No.	Typ. switch-off time	Weight
R422103000	26 ms	0.058 kg
R422103001	26 ms	0.058 kg
R422103077	26 ms	0.058 kg
R422103012	22 ms	0.061 kg
R422103013	22 ms	0.061 kg
R422103083	22 ms	0.061 kg
R422103002	13 ms	0.064 kg
R422103003	13 ms	0.064 kg
R422103078	13 ms	0.064 kg

Nominal flow Qn at 6 bar and Δp = 1 bar, MO = Manual override

Technical information

The min. control pressure must be adhered to, since otherwise faulty switching and valve failure may result!
The pressure dew point must be at least 15 °C under ambient and medium temperature and may not exceed 3 °C .
The oil content of compressed air must remain constant during the life cycle.
Use only the approved oils from AVENTICS. Further information can be found in the “Technical information” document (available in the MediaCentre).

The pilot type (external/internal) is not implemented in the valve, but in the end plate of the valve system.

Technical information

Material	
Housing	Polyamide fiber-glass reinforced
Seals	Acrylonitrile butadiene rubber Hydrogenated acrylonitrile butadiene rubber
End plate	Polyamide fiber-glass reinforced

Dimensions

Dimensions, single solenoid

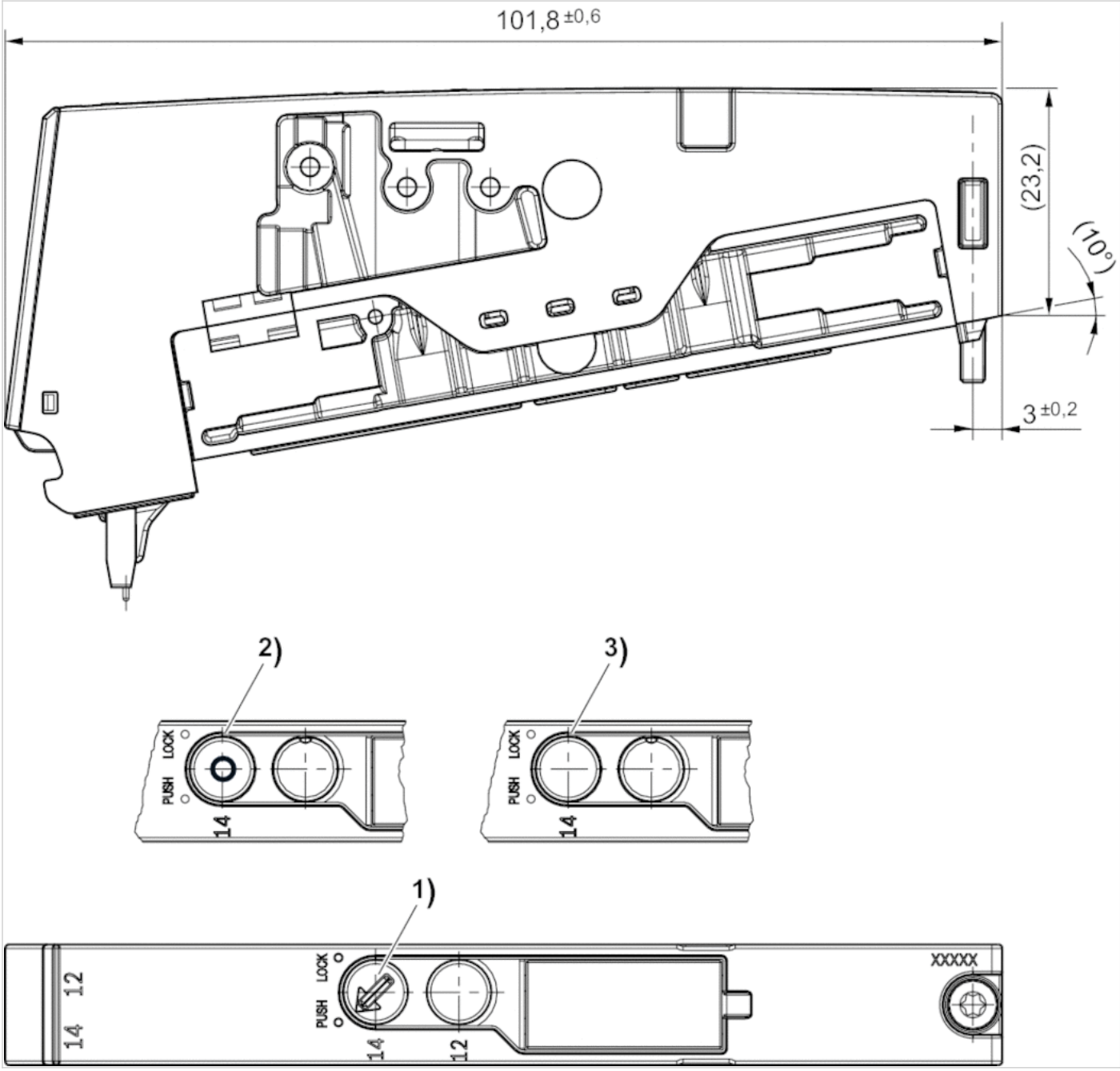

1) Manual override: with detent
2) manual override: without detent
3) Manual override: without detent

Dimensions

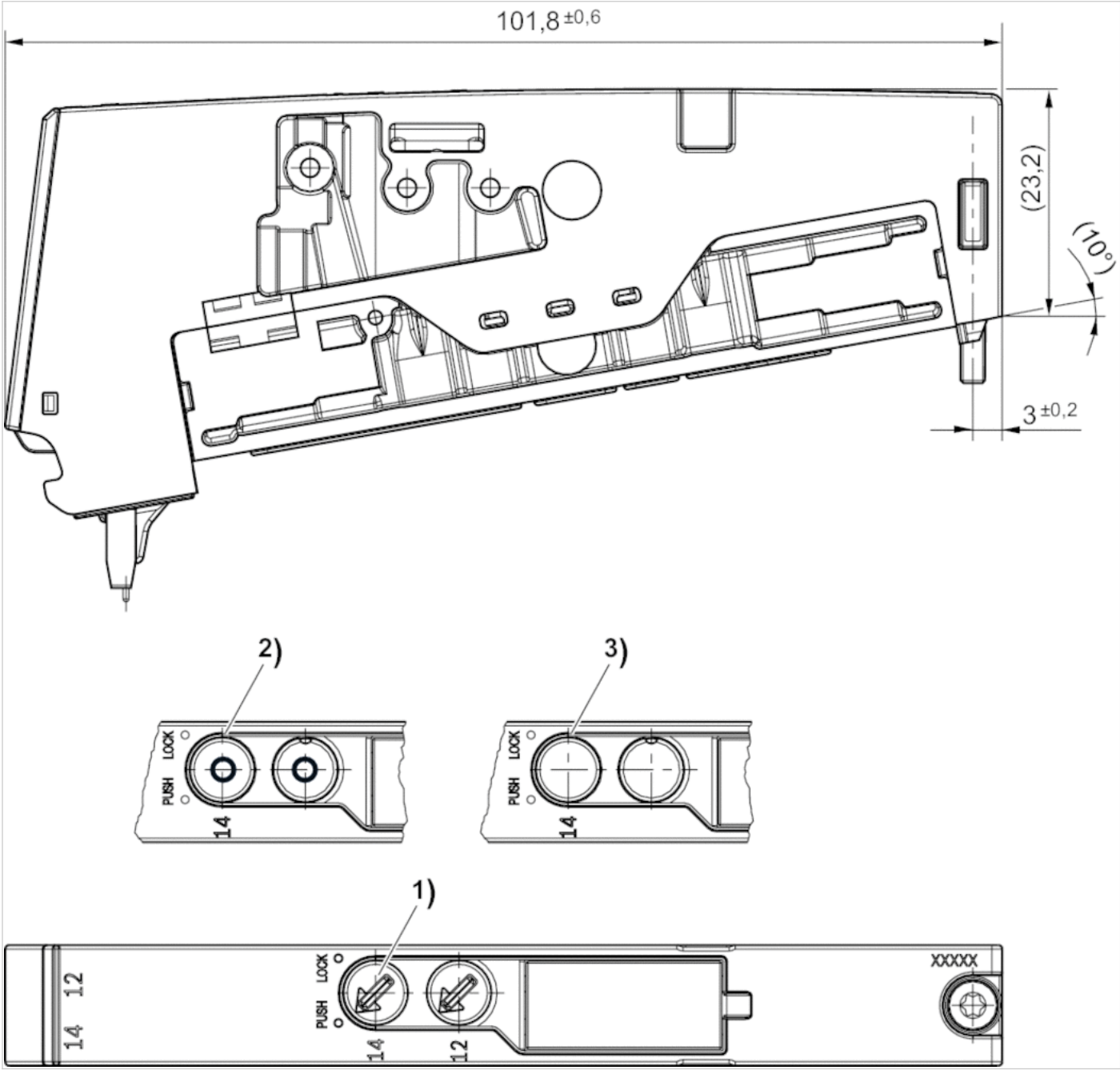

1) Manual override: with detent
2) manual override: without detent
3) Manual override: without detent

5/3-directional valve, Series AV05

- 5/3
- Qn = 650 l/min
- closed center
- Plate connection
- Manual override : with detent without detent without
- double solenoid
- Pilot : External

Version	Spool valve, positive overlapping
Activation	Electrically
Pilot	External
Sealing principle	Soft sealing
Blocking principle	Base plate principle, multiple
Working pressure min./max.	-0.9 ... 10 bar
Control pressure min./max.	3 ... 8 bar
Ambient temperature min./max.	-10 ... 60 °C
Medium temperature min./max.	-10 ... 60 °C
Medium	Compressed air
Max. particle size	40 µm
Oil content of compressed air	0 ... 5 mg/m³
Nominal flow Qn	650 l/min
Nominal flow 1 ▸ 2	650 l/min
Nominal flow 2 ▸ 3	520 l/min
Pilot control exhaust	With collective pilot air exhaust
Protection class with connection	IP65
LED status display	Yellow
Duty cycle	100 %
Typ. switch-on time	13 ms
Typ. switch-off time	13 ms
mounting screws	Hexalobular socket (TORX) ISO 10664-8
Mounting screw tightening torque	0.5 Nm
Tightening torque tolerance	±0,1 mT
Weight	0.062 kg

Technical data

Part No.		MO		Operational voltage	Voltage tolerance
				DC	DC
R422103004	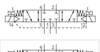		closed center	24 V	-10% / +10%
R422103005			closed center	24 V	-10% / +10%
R422103079		—	-	24 V	-10% / +10%

Part No.	Power consumption	Flow conductance	Flow conductance
	DC	b	C-value
R422103004	0.55 W	0.37	2.49 l/(s*bar)
R422103005	0.55 W	0.37	2.49 l/(s*bar)
R422103079	0.55 W	0.37	2.49 l/(s*bar)

Nominal flow Qn at 6 bar and Δp = 1 bar, MO = Manual override

Technical information

The min. control pressure must be adhered to, since otherwise faulty switching and valve failure may result!
The pressure dew point must be at least 15 °C under ambient and medium temperature and may not exceed 3 °C .
The oil content of compressed air must remain constant during the life cycle.
Use only the approved oils from AVENTICS. Further information can be found in the “Technical information” document (available in the MediaCentre).

The pilot type (external/internal) is not implemented in the valve, but in the end plate of the valve system.

Technical information

Material	
Housing	Polyamide fiber-glass reinforced
Seals	Acrylonitrile butadiene rubber Hydrogenated acrylonitrile butadiene rubber
End plate	Polyamide fiber-glass reinforced

Dimensions

Dimensions

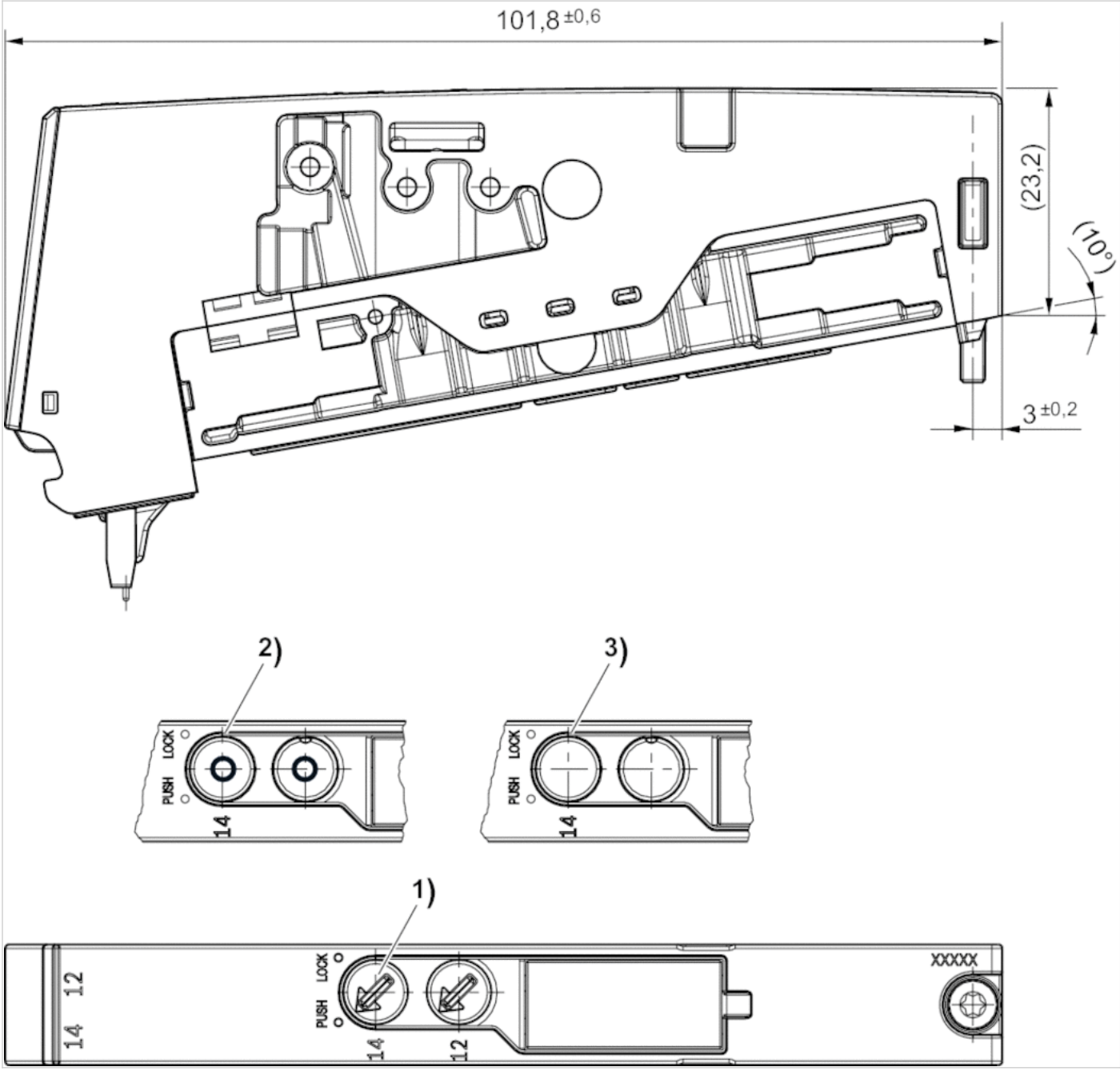

1) Manual override: with detent
2) manual override: without detent
3) Manual override: without detent

5/3-directional valve, Series AV05

R422103320

General series information
Series AV05

- The AVENTICS Series AV03/AV05 provide a reliable basis for both compact handling systems and complex automation solutions. Within machine safety the Series AV03/AV05 offers intelligent solutions that significantly reduce your effort in creating a safe design. With the integration of the fieldbus and I/O-modules of the Series AES, also all requirements for distributed control are available. The Series AV03/AV05 is easy to configure, easy to use and easy to extend as well as IIoT futureproof thanks to the integration of OPC UA and the Digital Twin

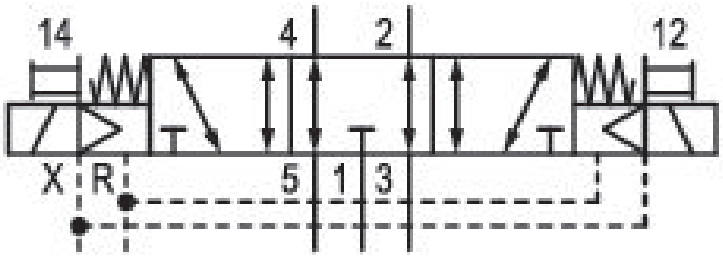

Technical data

Industry	Industrial
Activation	electrically
Nominal flow Qn	650 l/min
Switching principle	5/3, exhausted center
Function	Exhausted Center
Working pressure min.	-0.9 bar
Working pressure max	10 bar
Operational voltage	24 V DC
DC operating voltage	24 V
Voltage tolerance DC	-10% / +10%
Manual override	without detent

Valve type	Spool valve, positive overlapping
Actuating control	Double Solenoid
Sealing principle	soft seal
Pilot	External
Connection type	Plate connection
Blocking principle	Base plate principle, multiple
Control pressure min.	3 bar
Control pressure max.	8 bar
Min. ambient temperature	-10 °C
Max. ambient temperature	60 °C
Min. medium temperature	-10 °C
Max. medium temperature	60 °C
Medium	Compressed air
Max. particle size	40 µm
Oil content of compressed air min.	0 mg/m³
Oil content of compressed air max.	5 mg/m³
Pilot control exhaust	With collective pilot air exhaust
Flow conductance b	0.37
Flow conductance C	2.49 l/(s*bar)
Nominal flow Qn 1 to 2	650 l/min
Nominal flow Qn 2 to 3	520 l/min
Power consumption DC	0.55 W
LED status display	Yellow
Duty cycle	100 %
Typ. switch-on time	13 ms
Typ. switch-off time	13 ms
Protection class with connection	IP65
mounting screws	Hexalobular socket (TORX) ISO 10664-8
Mounting screw tightening torque	0.5 Nm
Tightening torque tolerance	±0,1 mT
Weight	0.062 kg

Material

Housing material	Polyamide fiber-glass reinforced
Seal material	Acrylonitrile butadiene rubber Hydrogenated acrylonitrile butadiene rubber
Material end plate	Polyamide fiber-glass reinforced

Part No.	R422103320

Technical information

The pilot type (external/internal) is not implemented in the valve, but in the end plate of the valve system.

The min. control pressure must be adhered to, since otherwise faulty switching and valve failure may result!

The pressure dew point must be at least 15 °C less than ambient and medium temperature and may not exceed 3 °C.

The oil content of compressed air must remain constant during the life cycle.

Use only the approved oils from AVENTICS. Further information can be found in the “Technical information” document (available in https://www.emerson.com/en-us/support).

Dimensions

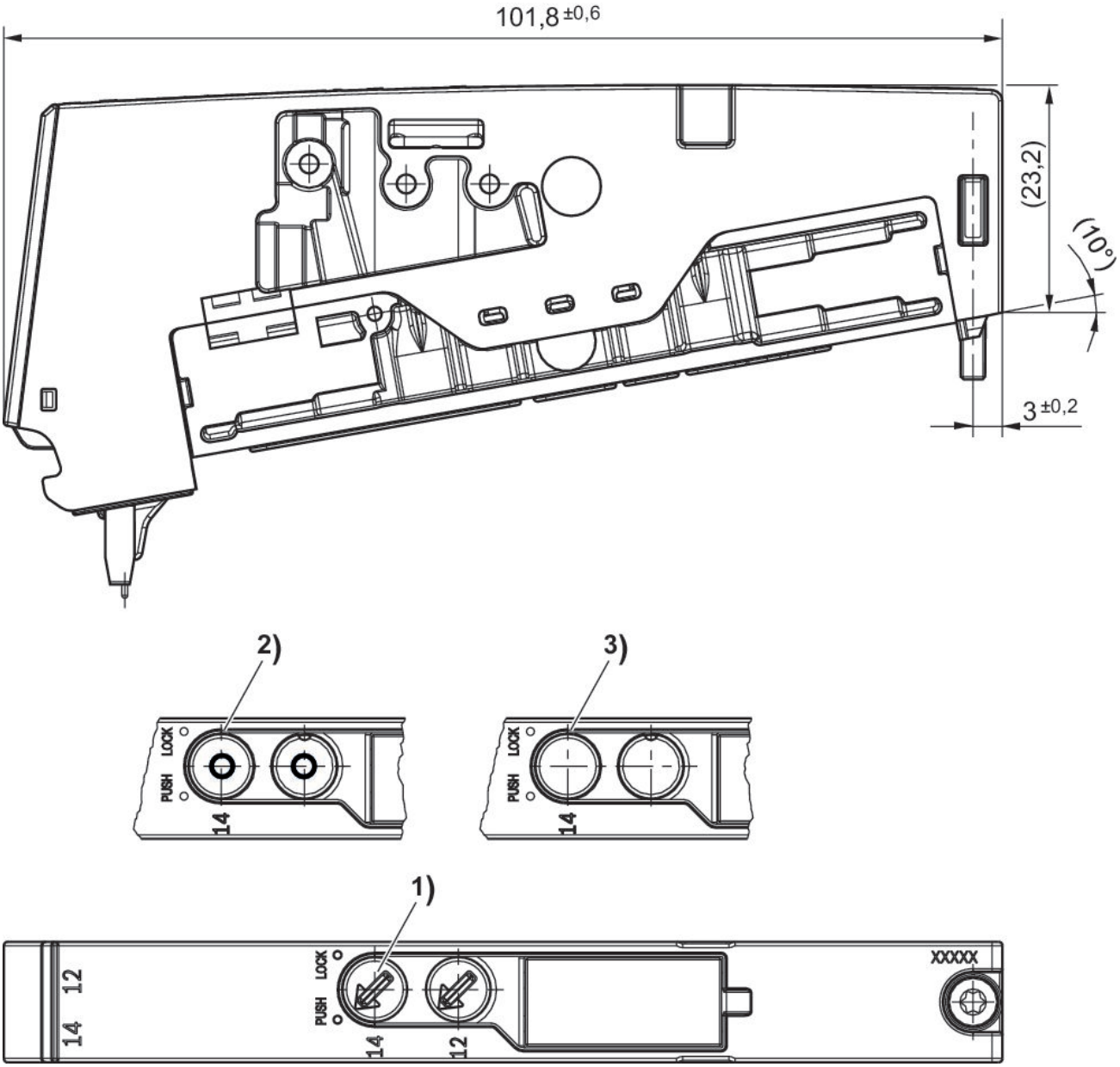

1) Manual override: with detent
2) manual override: without detent
3) Manual override: without detent

5/3-directional valve, Series AV05

R422103321

General series information
Series AV05

- The AVENTICS Series AV03/AV05 provide a reliable basis for both compact handling systems and complex automation solutions. Within machine safety the Series AV03/AV05 offers intelligent solutions that significantly reduce your effort in creating a safe design. With the integration of the fieldbus and I/O-modules of the Series AES, also all requirements for distributed control are available. The Series AV03/AV05 is easy to configure, easy to use and easy to extend as well as IIoT futureproof thanks to the integration of OPC UA and the Digital Twin

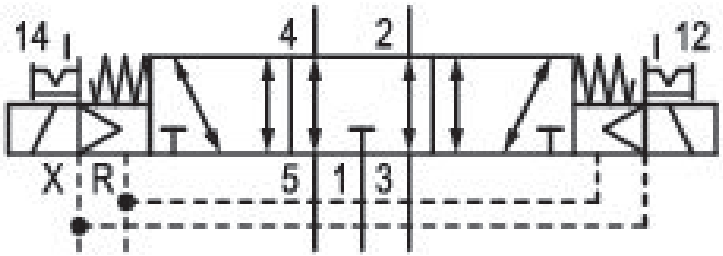

Technical data

Industry	Industrial
Activation	electrically
Nominal flow Qn	650 l/min
Switching principle	5/3, exhausted center
Function	Exhausted Center
Working pressure min.	-0.9 bar
Working pressure max	10 bar
Operational voltage	24 V DC
DC operating voltage	24 V
Voltage tolerance DC	-10% / +10%
Manual override	with detent

Valve type	Spool valve, positive overlapping
Actuating control	Double Solenoid
Sealing principle	soft seal
Pilot	External
Connection type	Plate connection
Blocking principle	Base plate principle, multiple
Control pressure min.	3 bar
Control pressure max.	8 bar
Min. ambient temperature	-10 °C
Max. ambient temperature	60 °C
Min. medium temperature	-10 °C
Max. medium temperature	60 °C
Medium	Compressed air
Max. particle size	40 µm
Oil content of compressed air min.	0 mg/m³
Oil content of compressed air max.	5 mg/m³
Pilot control exhaust	With collective pilot air exhaust
Flow conductance b	0.37
Flow conductance C	2.49 l/(s*bar)
Nominal flow Qn 1 to 2	650 l/min
Nominal flow Qn 2 to 3	520 l/min
Power consumption DC	0.55 W
LED status display	Yellow
Duty cycle	100 %
Typ. switch-on time	13 ms
Typ. switch-off time	13 ms
Protection class with connection	IP65
mounting screws	Hexalobular socket (TORX) ISO 10664-8
Mounting screw tightening torque	0.5 Nm
Tightening torque tolerance	±0,1 mT
Weight	0.062 kg

Material

Housing material	Polyamide fiber-glass reinforced
Seal material	Acrylonitrile butadiene rubber Hydrogenated acrylonitrile butadiene rubber
Material end plate	Polyamide fiber-glass reinforced

Part No.	R422103321

Technical information

The pilot type (external/internal) is not implemented in the valve, but in the end plate of the valve system.

The min. control pressure must be adhered to, since otherwise faulty switching and valve failure may result!

The pressure dew point must be at least 15 °C less than ambient and medium temperature and may not exceed 3 °C.

The oil content of compressed air must remain constant during the life cycle.

Use only the approved oils from AVENTICS. Further information can be found in the “Technical information” document (available in https://www.emerson.com/en-us/support).

Dimensions

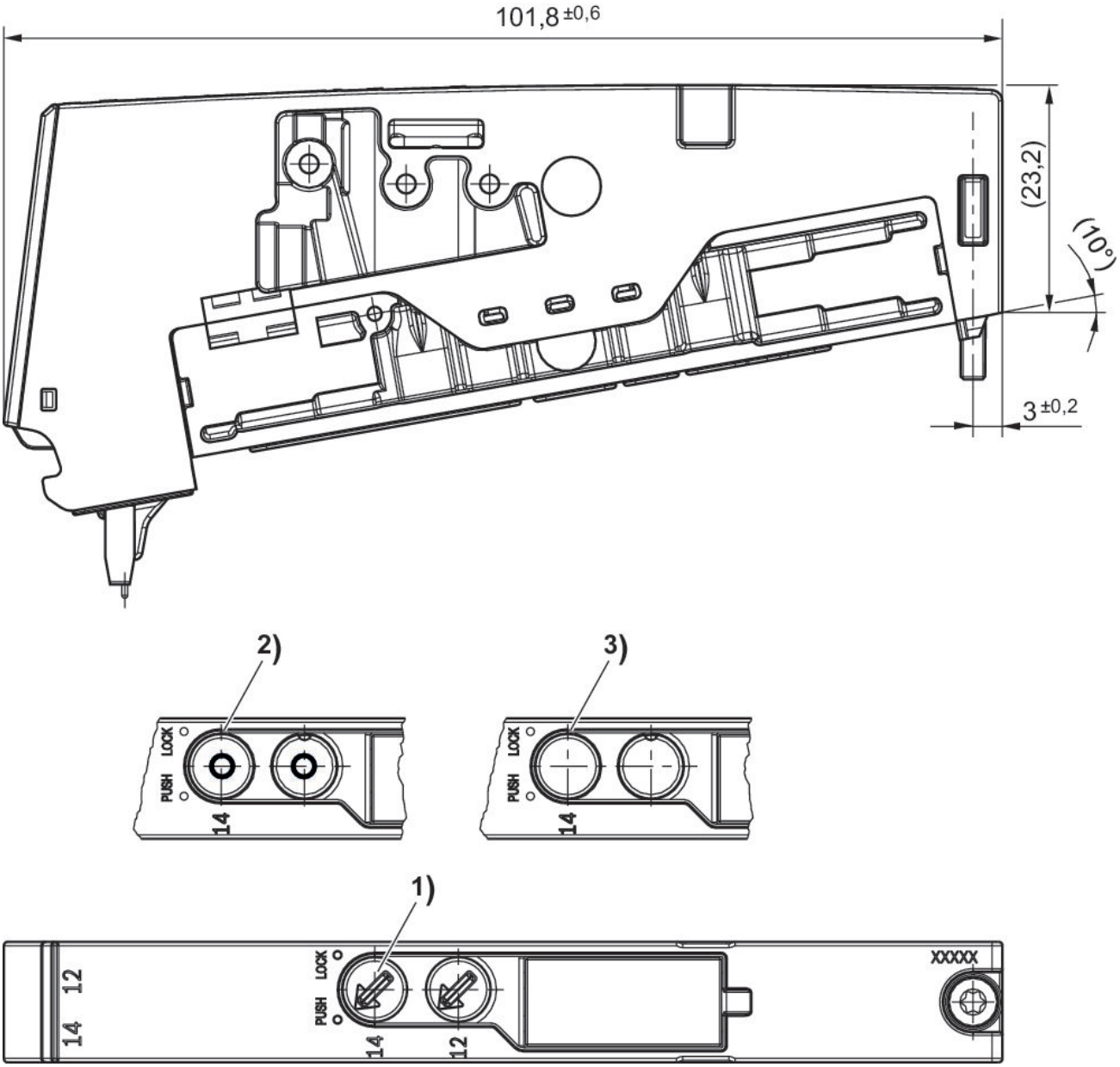

1) Manual override: with detent
2) manual override: without detent
3) Manual override: without detent

E/P pressure regulator, Series AV05-EP

- For multipole control, Display: display
- Electr. connection M12, 5-pin, A-coded
- With collective pilot air exhaust

Version	Piloted pressure regulator
Mounting orientation	Any
Working pressure max	11 bar
Ambient temperature min./max.	-10 ... 60 °C
Medium temperature min./max.	-10 ... 60 °C
Medium	Compressed air
Max. particle size	40 µm
Oil content of compressed air	0 ... 5 mg/m³
DC operating voltage	24 V
Voltage tolerance DC	-20% / +30%
Protection class	IP65
Weight	0.25 kg

Technical data

Part No.		Pressure setting range min./max.	Nominal input value	Actual output value
			Min./max.	Min./max.
R414007402		0.5 ... 6 bar	0 ... 10 V	0 ... 10 V
R414007407		0.5 ... 6 bar	4 ... 20 mA	4 ... 20 mA
R414007413		0.5 ... 10 bar	0 ... 10 V	0 ... 10 V
R414007418		0.5 ... 10 bar	4 ... 20 mA	4 ... 20 mA
R414007403		0.5 ... 6 bar	0 ... 10 V	0 ... 10 V
R414007408		0.5 ... 6 bar	4 ... 20 mA	4 ... 20 mA
R414007414		0.5 ... 10 bar	0 ... 10 V	0 ... 10 V
R414007419		0.5 ... 10 bar	4 ... 20 mA	4 ... 20 mA
R414007392		0.5 ... 10 bar	0 ... 10 V	0 ... 10 V
R414007396		0.5 ... 10 bar	4 ... 20 mA	4 ... 20 mA

Part No.	Max. power consumption	Repetitive precision	Hysteresis	
	mA			
R414007402	220 mA	0.04 bar	0.05 bar	1)
R414007407	220 mA	0.04 bar	0.05 bar	1)
R414007413	220 mA	0.04 bar	0.05 bar	1)
R414007418	220 mA	0.04 bar	0.05 bar	1)
R414007403	160 mA	0.04 bar	0.05 bar	2)
R414007408	160 mA	0.04 bar	0.05 bar	2)
R414007414	160 mA	0.04 bar	0.05 bar	2)
R414007419	160 mA	0.04 bar	0.05 bar	2)
R414007392	160 mA	0.18 bar	0.2 bar	2)
R414007396	160 mA	0.18 bar	0.2 bar	2)

See diagrams for flow characteristic curve

1) Power outage: operating line exhaust

2) Power outage: maintain pressure

Technical information

The min. control pressure must be adhered to, since otherwise faulty switching and valve failure may result!
The pressure dew point must be at least 15 °C under ambient and medium temperature and may not exceed 3 °C .
The oil content of compressed air must remain constant during the life cycle.
Use only the approved oils from AVENTICS. Further information can be found in the “Technical information” document (available in the MediaCentre).

Technical information

Material	
Housing	Polyarylamide
Seals	Nitrile butadiene rubber

Dimensions

Dimensions

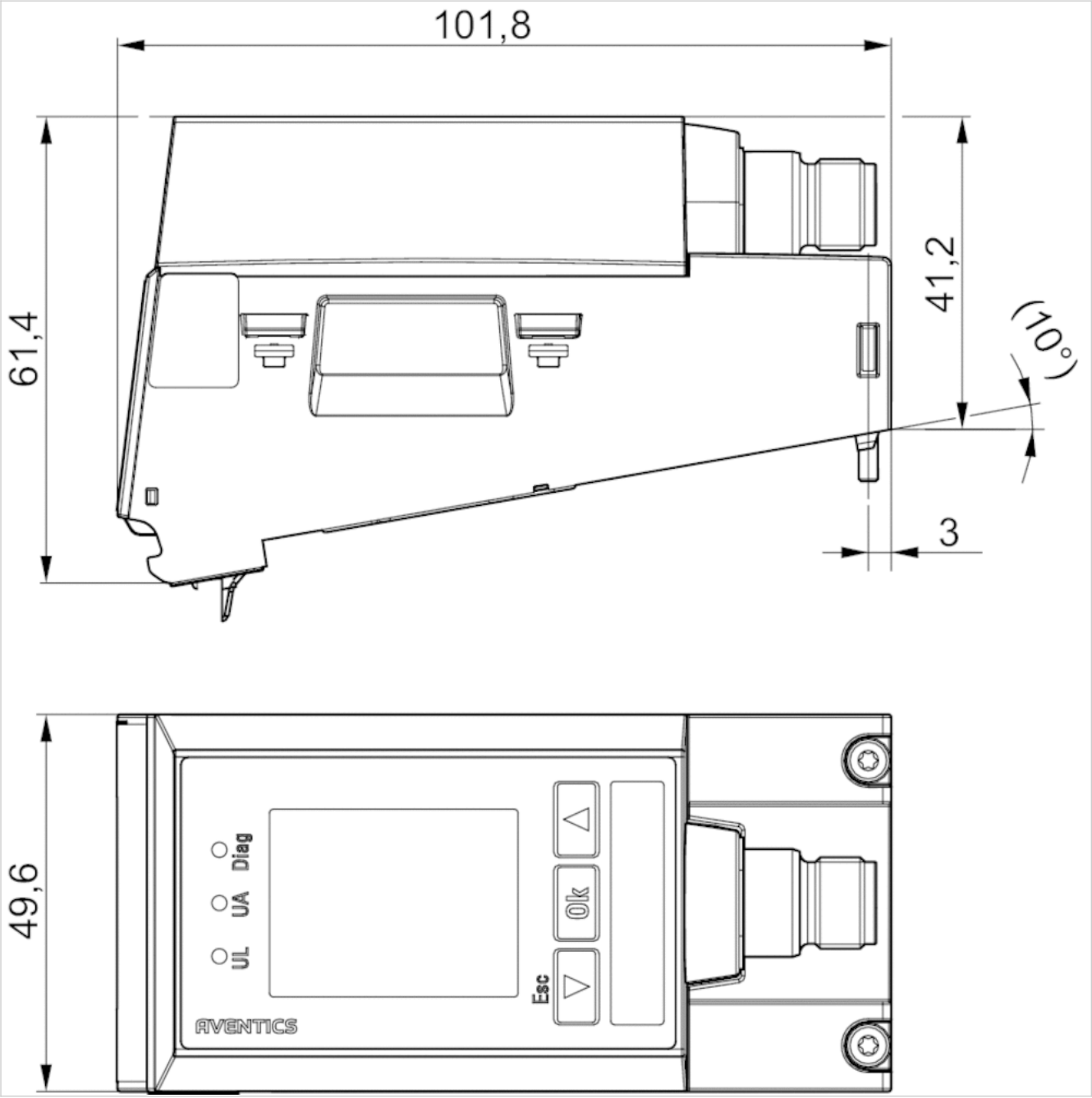

Port for plug M12x1

Diagrams

Flow characteristic curve, Pressure zone control

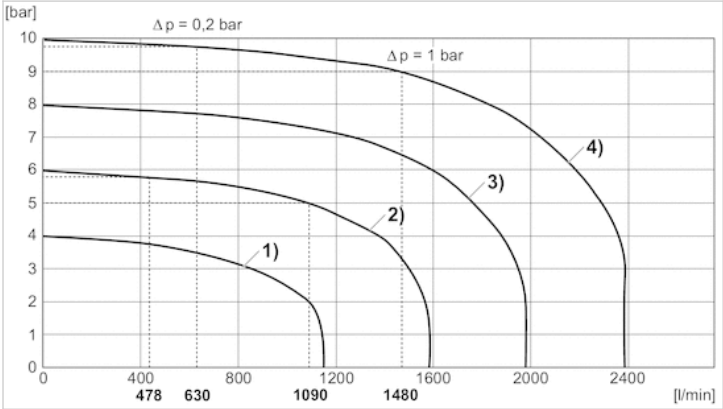

1) Pv = 5 bar , controlled: 4 bar
2) Pv = 7 bar , controlled: 6 bar
3) Pv = 9 bar , controlled: 8 bar
4) Pv = 11 bar , controlled: 10 bar

Flow characteristic curve, Single pressure control

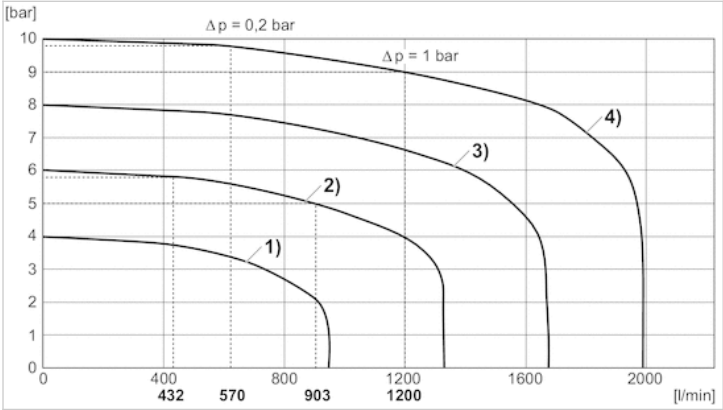

1) Pv = 5 bar , controlled: 4 bar
2) Pv = 7 bar , controlled: 6 bar
3) Pv = 9 bar , controlled: 8 bar
4) Pv = 11 bar , controlled: 10 bar

Circuit diagram

Fig. 2, Characteristic and pin assignment for voltage control with actual output value

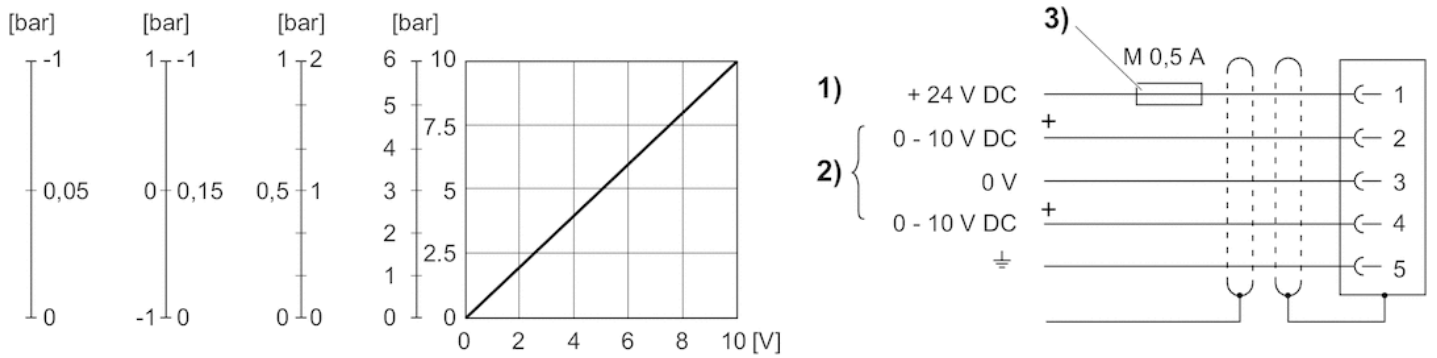

1) Supply voltage 2) Actual value (pin 4) and nominal value (pin 2) are related to 0 V.
Min. load resistance of nominal value output = 1 kΩ.
3) The operating voltage must be protected by an external M 0.5 A fuse.
Connect the plug via a shielded cable to ensure EMC.

Characteristic and pin assignment for current control with actual output value

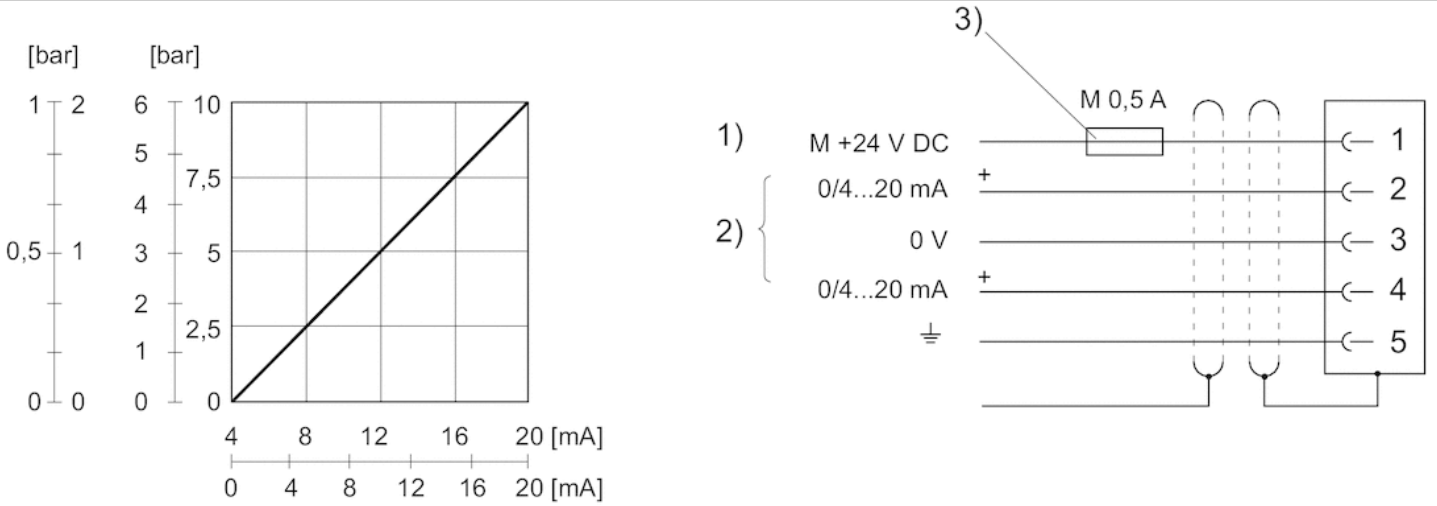

1) power supply
2) Actual value (pin 4) and nominal value (pin 2) are related to 0 V (pin 3).
Nominal input value (ohmic load 100 Ω), actual output value: external ohmic load 300 Ω. If the power supply is switched off, the nominal input value is high-ohmic.
3) The power supply must be protected by an external M 0.5 A fuse.
Connect the plug via a shielded cable to ensure EMC.

E/P pressure regulator, Series AV05-EP

- For multipole control, Display: LED
- Electr. connection M12, 5-pin, A-coded
- With collective pilot air exhaust

Version	Piloted pressure regulator
Mounting orientation	Any
Working pressure max	11 bar
Ambient temperature min./max.	-10 ... 60 °C
Medium temperature min./max.	-10 ... 60 °C
Medium	Compressed air
Max. particle size	40 µm
Oil content of compressed air	0 ... 5 mg/m³
DC operating voltage	24 V
Voltage tolerance DC	-20% / +30%
Protection class	IP65
Weight	0.24 kg

Technical data

Part No.		Pressure setting range min./max.	Nominal input value	Actual output value
			Min./max.	Min./max.
R414007399		0.5 ... 6 bar	0 ... 10 V	0 ... 10 V
R414007404		0.5 ... 6 bar	4 ... 20 mA	4 ... 20 mA
R414007410		0.5 ... 10 bar	0 ... 10 V	0 ... 10 V
R414007415		0.5 ... 10 bar	4 ... 20 mA	4 ... 20 mA
R414007400		0.5 ... 6 bar	0 ... 10 V	0 ... 10 V
R414007405		0.5 ... 6 bar	4 ... 20 mA	4 ... 20 mA
R414007411		0.5 ... 10 bar	0 ... 10 V	0 ... 10 V
R414007416		0.5 ... 10 bar	4 ... 20 mA	4 ... 20 mA
R414007390		0.5 ... 10 bar	0 ... 10 V	0 ... 10 V
R414007394		0.5 ... 10 bar	4 ... 20 mA	4 ... 20 mA

Part No.	Max. power consumption	Repetitive precision	Hysteresis	
	mA			
R414007399	180 mA	0.04 bar	0.05 bar	1)
R414007404	180 mA	0.04 bar	0.05 bar	1)
R414007410	180 mA	0.04 bar	0.05 bar	1)
R414007415	180 mA	0.04 bar	0.05 bar	1)
R414007400	120 mA	0.04 bar	0.05 bar	2)
R414007405	120 mA	0.04 bar	0.05 bar	2)
R414007411	120 mA	0.04 bar	0.05 bar	2)
R414007416	120 mA	0.04 bar	0.05 bar	2)
R414007390	120 mA	0.18 bar	0.2 bar	2)
R414007394	120 mA	0.18 bar	0.2 bar	2)

See diagrams for flow characteristic curve

1) Power outage: operating line exhaust

2) Power outage: maintain pressure

Technical information

The min. control pressure must be adhered to, since otherwise faulty switching and valve failure may result!
The pressure dew point must be at least 15 °C under ambient and medium temperature and may not exceed 3 °C .
The oil content of compressed air must remain constant during the life cycle.
Use only the approved oils from AVENTICS. Further information can be found in the “Technical information” document (available in the MediaCentre).

Technical information

Material	
Housing	Polyarylamide
Seals	Nitrile butadiene rubber

Dimensions

Dimensions

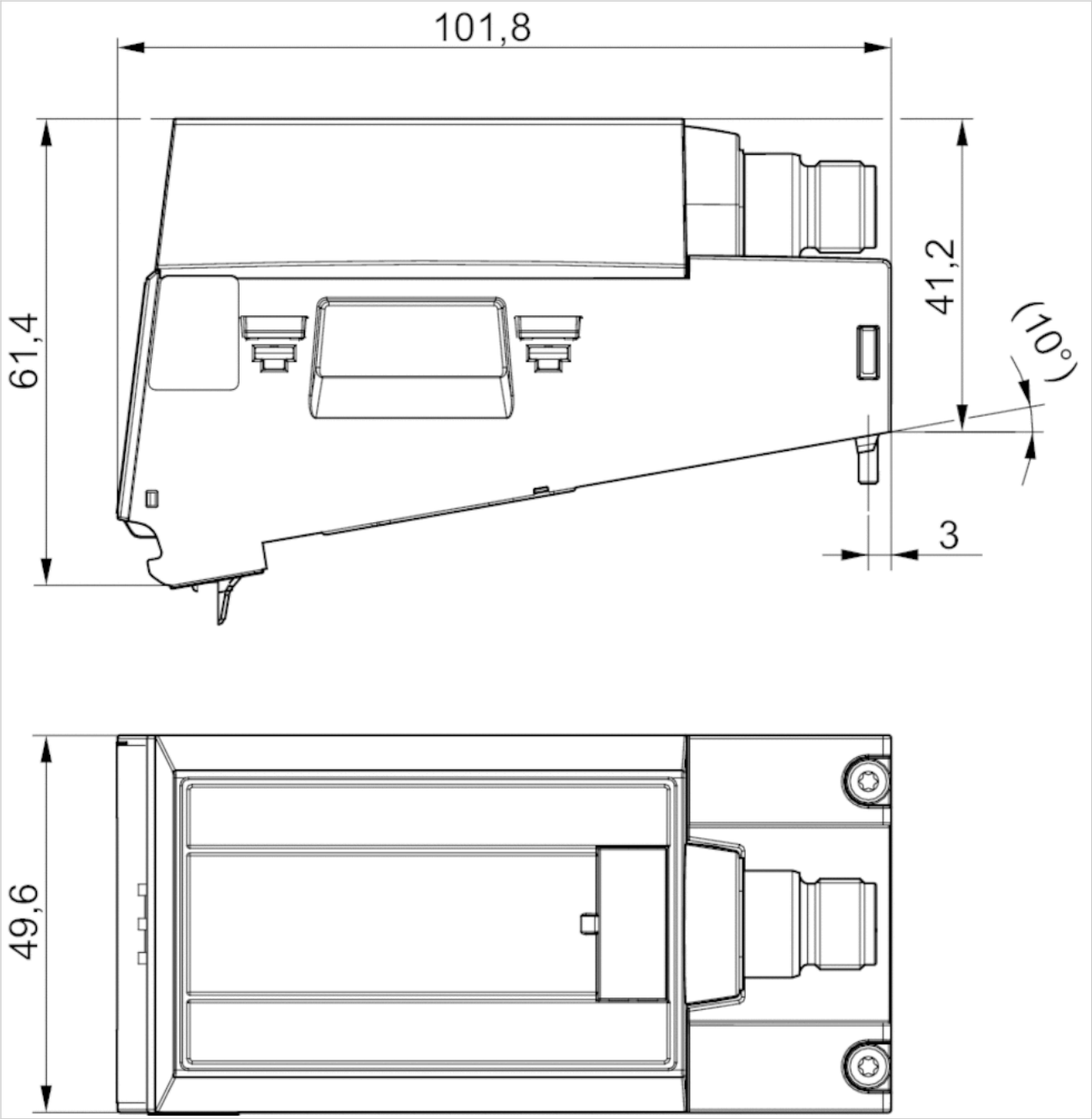

Port for plug M12x1

Diagrams

Flow characteristic curve, Pressure zone control

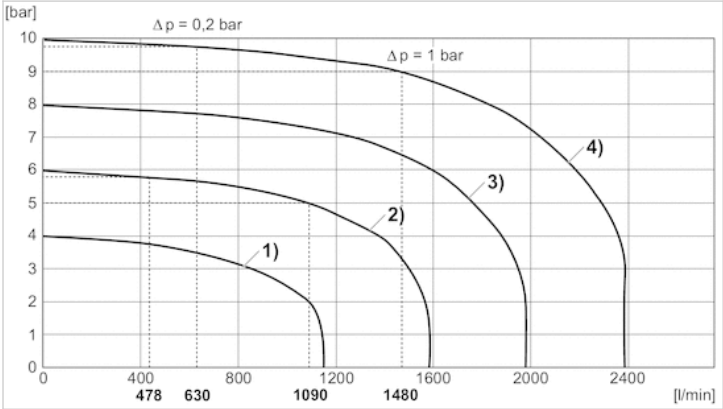

1) Pv = 5 bar , controlled: 4 bar
2) Pv = 7 bar , controlled: 6 bar
3) Pv = 9 bar , controlled: 8 bar
4) Pv = 11 bar , controlled: 10 bar

Flow characteristic curve, Single pressure control

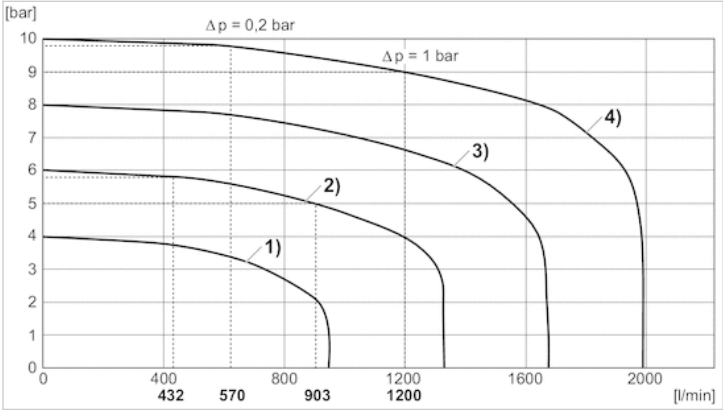

1) Pv = 5 bar , controlled: 4 bar
2) Pv = 7 bar , controlled: 6 bar
3) Pv = 9 bar , controlled: 8 bar
4) Pv = 11 bar , controlled: 10 bar

Circuit diagram

Fig. 2, Characteristic and pin assignment for voltage control with actual output value

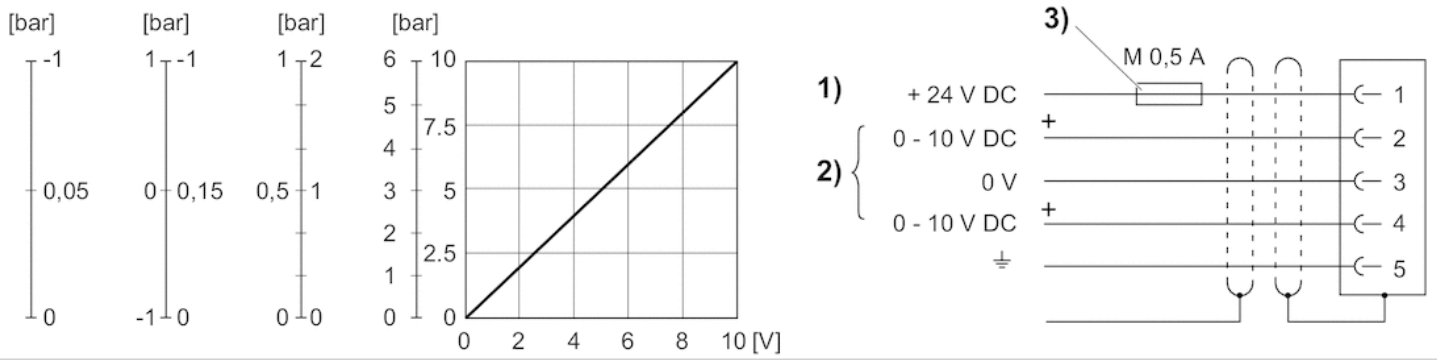

1) Supply voltage 2) Actual value (pin 4) and nominal value (pin 2) are related to 0 V.
Min. load resistance of nominal value output = 1 kΩ.
3) The operating voltage must be protected by an external M 0.5 A fuse.
Connect the plug via a shielded cable to ensure EMC.

Characteristic and pin assignment for current control with actual output value

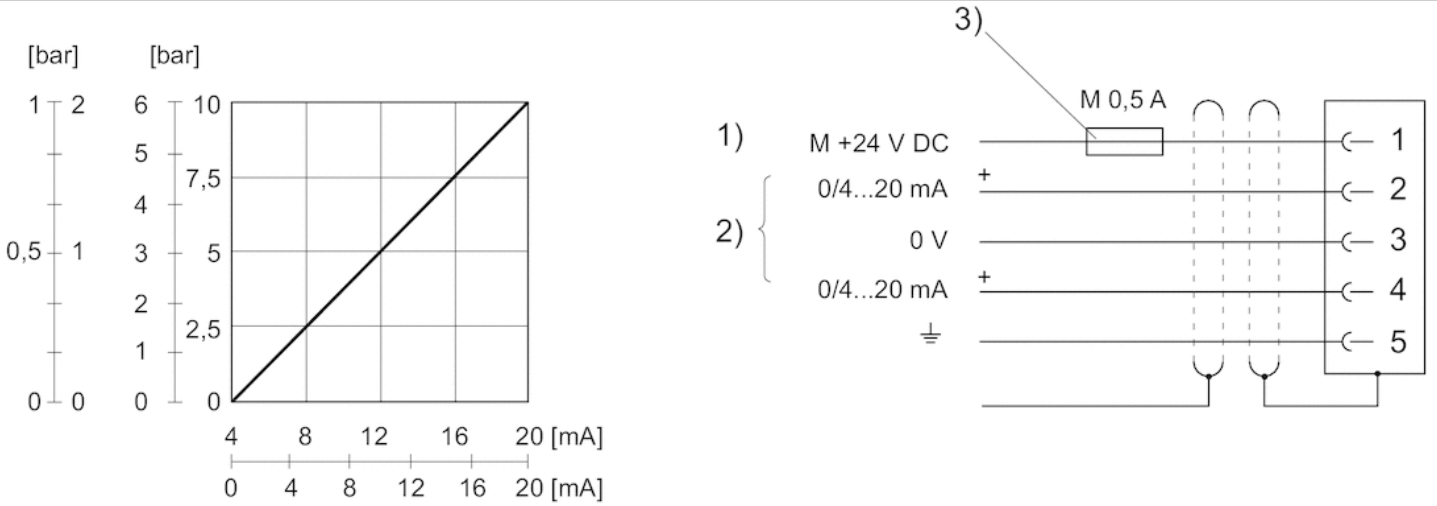

1) power supply
2) Actual value (pin 4) and nominal value (pin 2) are related to 0 V (pin 3).
Nominal input value (ohmic load 100 Ω), actual output value: external ohmic load 300 Ω. If the power supply is switched off, the nominal input value is high-ohmic.
3) The power supply must be protected by an external M 0.5 A fuse.
Connect the plug via a shielded cable to ensure EMC.

E/P pressure regulator, Series AV05-EP

- For fieldbus connection, Display: display
- with directional pilot air exhaust

Version	Piloted pressure regulator
Mounting orientation	Any
Working pressure max	11 bar
Ambient temperature min./max.	-10 ... 60 °C
Medium temperature min./max.	-10 ... 60 °C
Medium	Compressed air
Max. particle size	40 µm
Oil content of compressed air	0 ... 5 mg/m³
DC operating voltage	24 V
Voltage tolerance DC	-20% / +30%
Protection class	IP65
Weight	0.25 kg

Technical data

Part No.		Pressure setting range min./max.	Max. power consumption mA	Repetitive precision
R414007920		0.5 ... 10 bar	220 mA	0.04 bar
R414007886		0.5 ... 10 bar	160 mA	0.04 bar
R414007398		0.5 ... 10 bar	160 mA	0.18 bar

Part No.	Hysteresis	
R414007920	0.05 bar	1)
R414007886	0.05 bar	2)
R414007398	0.2 bar	2)

See diagrams for flow characteristic curve

1) Power outage: operating line exhaust

2) Power outage: maintain pressure

Technical information

The min. control pressure must be adhered to, since otherwise faulty switching and valve failure may result!
The pressure dew point must be at least 15 °C under ambient and medium temperature and may not exceed 3 °C .
The oil content of compressed air must remain constant during the life cycle.
Use only the approved oils from AVENTICS. Further information can be found in the “Technical information” document (available in the MediaCentre).

Technical information

Material	
Housing	Polyarylamide
Seals	Nitrile butadiene rubber

Dimensions

Dimensions

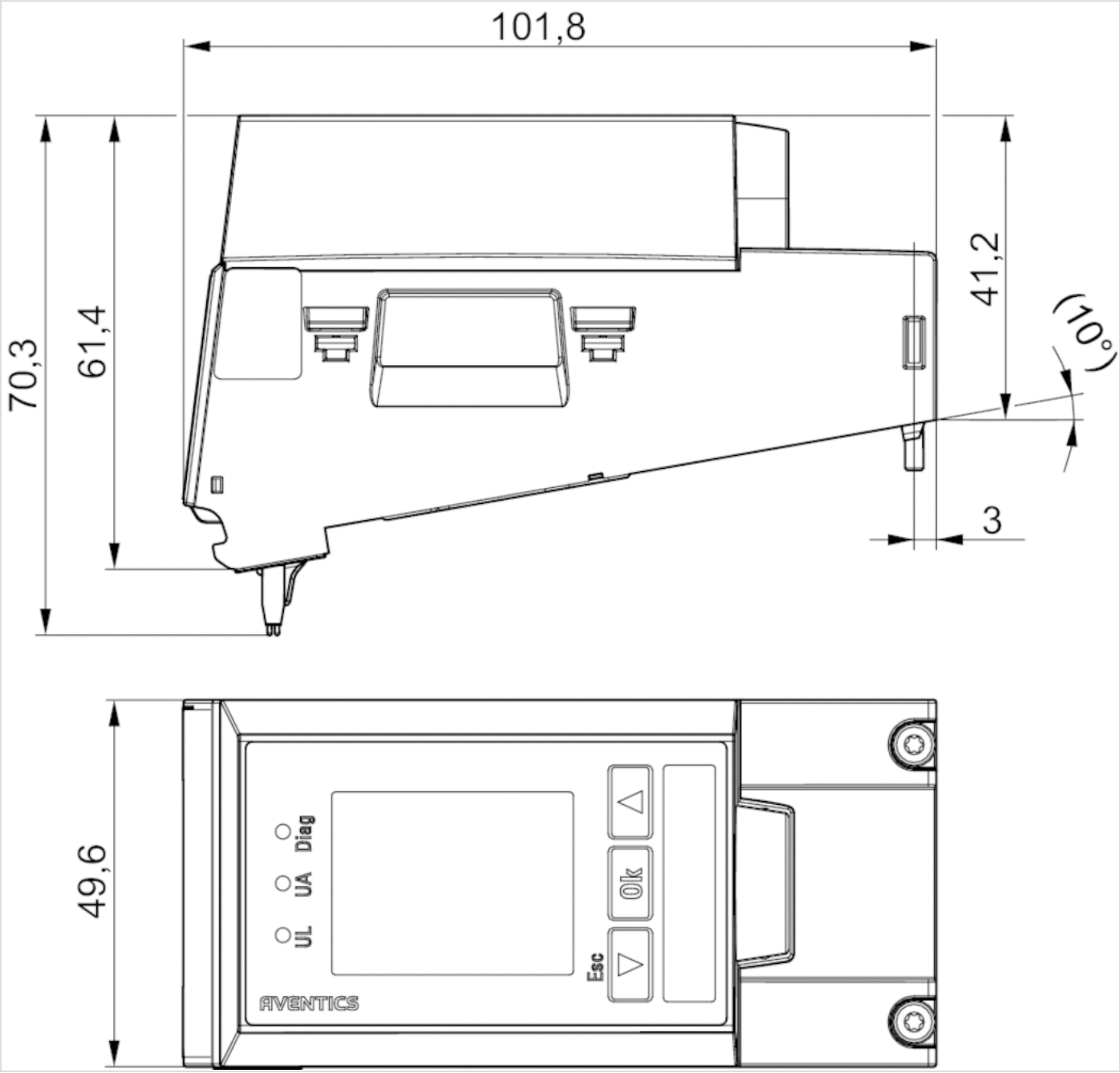

Diagrams

Flow characteristic curve, Pressure zone control

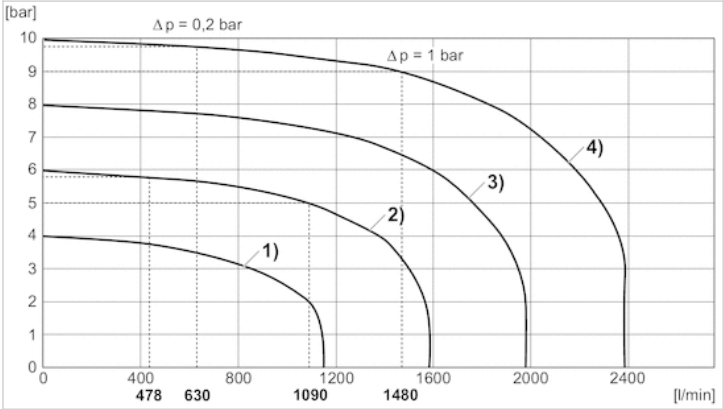

1) Pv = 5 bar , controlled: 4 bar
2) Pv = 7 bar , controlled: 6 bar
3) Pv = 9 bar , controlled: 8 bar
4) Pv = 11 bar , controlled: 10 bar

Flow characteristic curve, Single pressure control

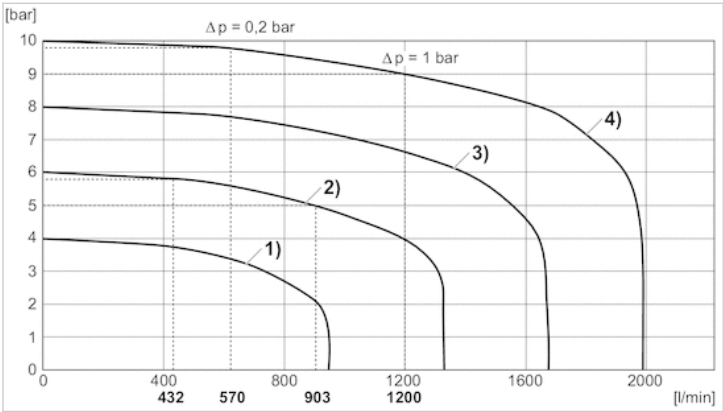

1) Pv = 5 bar , controlled: 4 bar
2) Pv = 7 bar , controlled: 6 bar
3) Pv = 9 bar , controlled: 8 bar
4) Pv = 11 bar , controlled: 10 bar

Characteristics, Further information can be found in the operating instructions.

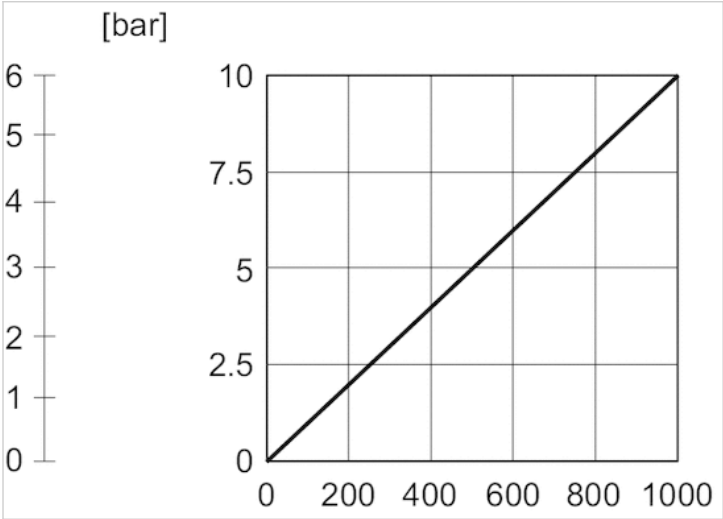

The regulator features a resolution of 10 bits (bit 0 to 9) for the serial nominal value and serial actual value: The nominal value and actual value range for the 10 bar version lies in the range of 0 to 1000 at a resolution of 10 mbar.

E/P pressure regulator, Series AV05-EP

- For fieldbus connection, Display: LED
- with directional pilot air exhaust

Version	Piloted pressure regulator
Mounting orientation	Any
Working pressure max	11 bar
Ambient temperature min./max.	-10 ... 60 °C
Medium temperature min./max.	-10 ... 60 °C
Medium	Compressed air
Max. particle size	40 µm
Oil content of compressed air	0 ... 5 mg/m³
DC operating voltage	24 V
Voltage tolerance DC	-20% / +30%
Protection class	IP65
Weight	0.19 kg

Technical data

Part No.		Pressure setting range min./max.	Max. power consumption mA	Repetitive precision
R414007919		0.5 ... 10 bar	180 mA	0.04 bar
R414007421		0.5 ... 10 bar	120 mA	0.04 bar
R414007397		0.5 ... 10 bar	120 mA	0.18 bar

Part No.	Hysteresis	
R414007919	0.05 bar	1)
R414007421	0.05 bar	2)
R414007397	0.2 bar	2)

See diagrams for flow characteristic curve

1) Power outage: operating line exhaust

2) Power outage: maintain pressure

Technical information

The min. control pressure must be adhered to, since otherwise faulty switching and valve failure may result!
The pressure dew point must be at least 15 °C under ambient and medium temperature and may not exceed 3 °C .
The oil content of compressed air must remain constant during the life cycle.
Use only the approved oils from AVENTICS. Further information can be found in the “Technical information” document (available in the MediaCentre).

Technical information

Material	
Housing	Polyarylamide
Seals	Nitrile butadiene rubber

Dimensions

Dimensions

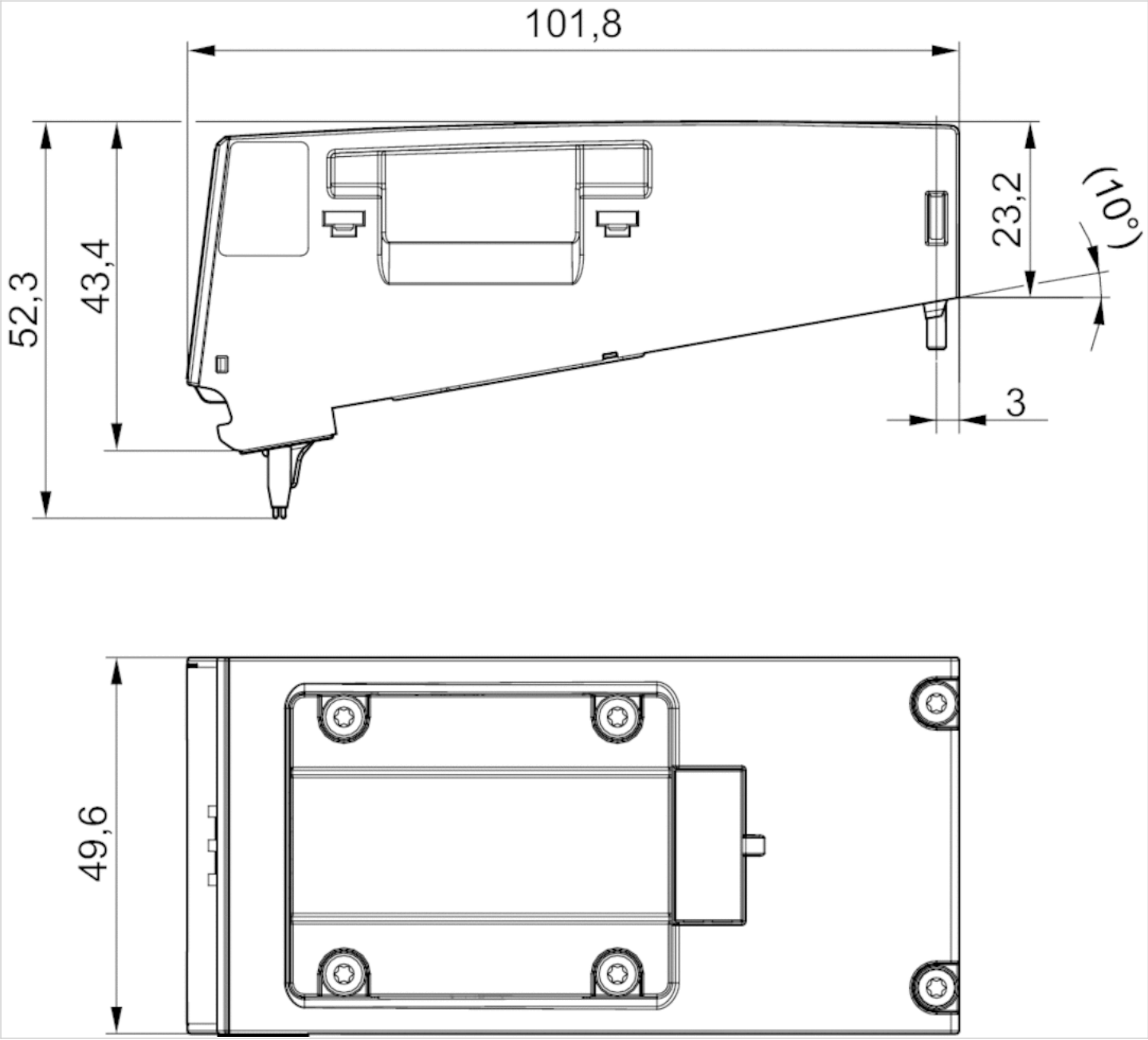

Diagrams

Flow characteristic curve, Pressure zone control

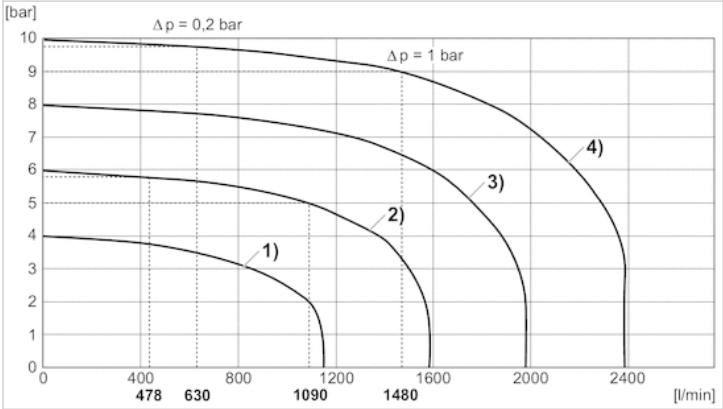

1) Pv = 5 bar , controlled: 4 bar
2) Pv = 7 bar , controlled: 6 bar
3) Pv = 9 bar , controlled: 8 bar
4) Pv = 11 bar , controlled: 10 bar

Flow characteristic curve, Single pressure control

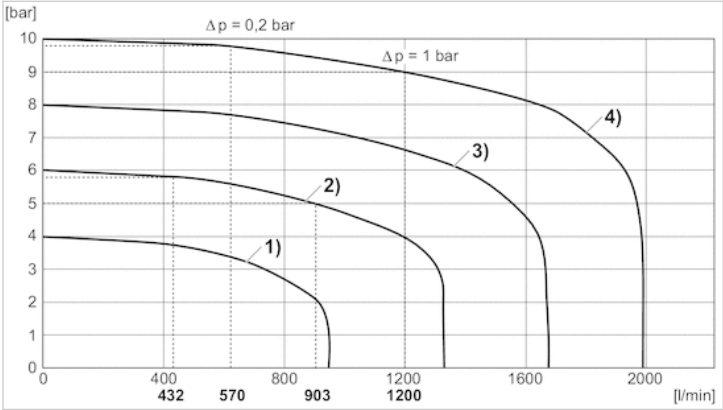

1) Pv = 5 bar , controlled: 4 bar
2) Pv = 7 bar , controlled: 6 bar
3) Pv = 9 bar , controlled: 8 bar
4) Pv = 11 bar , controlled: 10 bar

Characteristics, Further information can be found in the operating instructions.

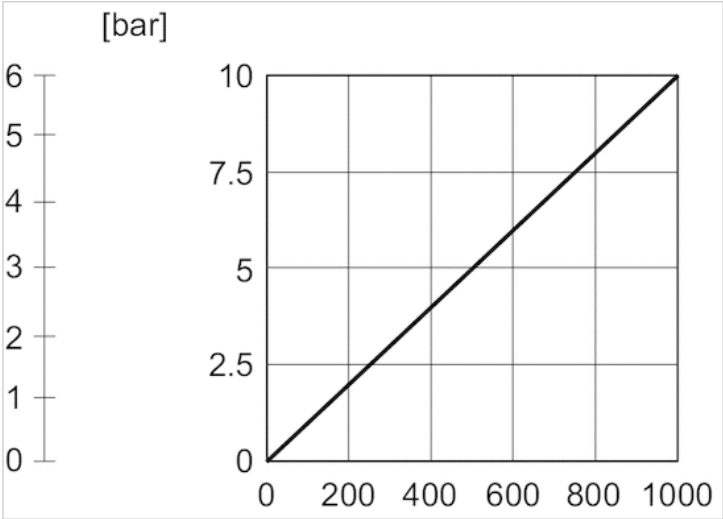

The regulator features a resolution of 10 bits (bit 0 to 9) for the serial nominal value and serial actual value: The nominal value and actual value range for the 10 bar version lies in the range of 0 to 1000 at a resolution of 10 mbar.

Bus coupler, series AES

R412018218

General series information
Series AES

- The AVENTICS Series AES fieldbus connection can be integrated into all AVENTICS fieldbus-compatible valve systems or can also be configured as a stand-alone solution. AES connects your AVENTICS valve system to all relevant fieldbus protocols and offers the integration of I/O-modules and enables optimized decentralized wiring of sensors. The integration of the Digital Twin enables users to be IIoT ready and use the AES to solve their interoperability challenges.

Technical data

Industry
Industrial

Version
Bus coupler

Fieldbus protocol
PROFIBUS DP

E/A capable
connection with I/O

Number of I/O connections
512 inputs / 512 outputs

Power plug IN type
Plug

Power plug IN size
M12x1

Power plug IN number of pole
4-pin

Power plug IN coding
A-coded

Fieldbus design
D-design

Min. ambient temperature
-10 °C

Max. ambient temperature
60 °C

Number of solenoid coils max.
128

Max. number of valve positions
64

Operational voltage electronics
24 V DC

Electronics voltage tolerance
-25% / +25%

Power consumption electronics
0.1 A

Operating voltage, actuators
24 V DC

Total current for actuators
4 A

Protection class
IP65

Cycle time at 256 bits
< 1 ms

Logic/actuator voltage
Galvanically isolated

Diagnosis
Short circuit
Undervoltage

I/O module extension max.
10

Generic emission standard in accordance with norm
EN 61000-6-4

Generic immunity standard in accordance with norm
EN 61000-6-2

Communication port Type
Plug

Communication port, Thread size
M12x1

Communication port, Number of poles
5-pin

Communication port, Coding
B-coded

Communication port 2
Socket

Communication port 2
M12x1

Communication port 2
5-pin

Communication port 2
B-coded

Weight
0.16 kg

Material

Housing material
Polyamide fiber-glass reinforced

Part No.
R412018218

Technical information

You will find assignment schemes for the product in the operating instructions, or contact the nearest AVENTICS sales office.

Voltage and short-circuit monitoring per LED.

During cyclical data transfer, the bus coupler can send 512 bits of input data to the controller and receive 512 bits of output data from the controller.

Scope of delivery: Incl. mounting screws 3x

Dimensions

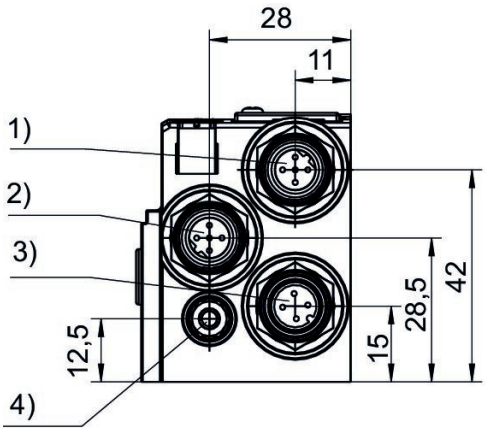

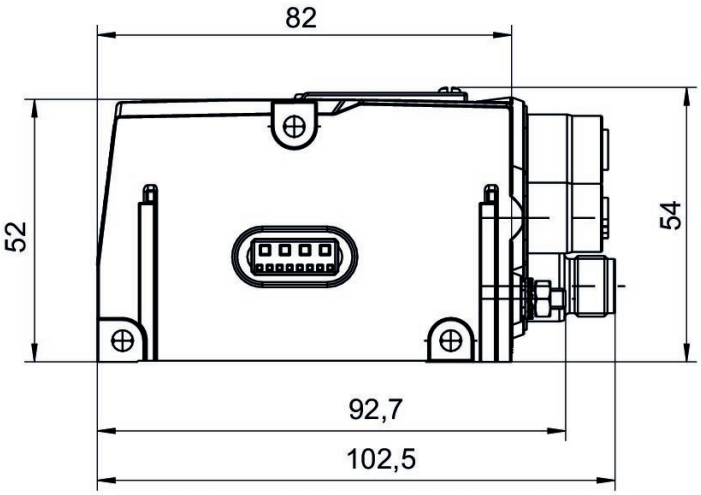

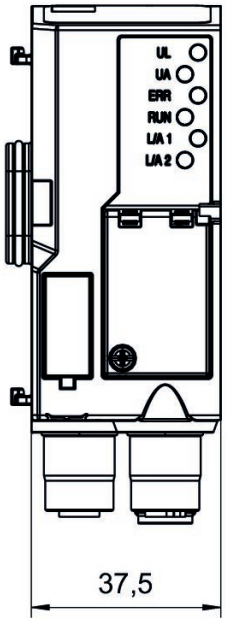

1) Fieldbus connection 2) Fieldbus connection 3) Power supply 4) Functional ground

Bus coupler, series AES

R412018220

General series information
Series AES

- The AVENTICS Series AES fieldbus connection can be integrated into all AVENTICS fieldbus-compatible valve systems or can also be configured as a stand-alone solution. AES connects your AVENTICS valve system to all relevant fieldbus protocols and offers the integration of I/O-modules and enables optimized decentralized wiring of sensors. The integration of the Digital Twin enables users to be IIoT ready and use the AES to solve their interoperability challenges.

Technical data

Industry
Industrial

Version
Bus coupler

Fieldbus protocol
CANopen

E/A capable
connection with I/O

Number of I/O connections
512 inputs / 512 outputs

Power plug IN type
Plug

Power plug IN size
M12x1

Power plug IN number of pole
4-pin

Power plug IN coding
A-coded

Fieldbus design
D-design

Min. ambient temperature
-10 °C

Max. ambient temperature
60 °C

Number of solenoid coils max.
128

Max. number of valve positions
64

Operational voltage electronics
24 V DC

Electronics voltage tolerance
-25% / +25%

Power consumption electronics
0.1 A

Operating voltage, actuators
24 V DC

Total current for actuators
4 A

Protection class
IP65

Cycle time at 256 bits
< 1 ms

Logic/actuator voltage
Galvanically isolated

Diagnosis
Short circuit
Undervoltage

I/O module extension max.
10

Generic emission standard in accordance with norm
EN 61000-6-4

Generic immunity standard in accordance with norm
EN 61000-6-2

Communication port Type
Plug

Communication port, Thread size
M12x1

Communication port, Number of poles
5-pin

Communication port, Coding
A-coded

Communication port 2
Socket

Communication port 2
M12x1

Communication port 2
5-pin

Communication port 2
A-coded

Weight
0.16 kg

Material

Housing material
Polyamide fiber-glass reinforced

Part No.
R412018220

Technical information

You will find assignment schemes for the product in the operating instructions, or contact the nearest AVENTICS sales office.

Voltage and short-circuit monitoring per LED.

During cyclical data transfer, the bus coupler can send 512 bits of input data to the controller and receive 512 bits of output data from the controller.

Scope of delivery: Incl. mounting screws 3x

Dimensions

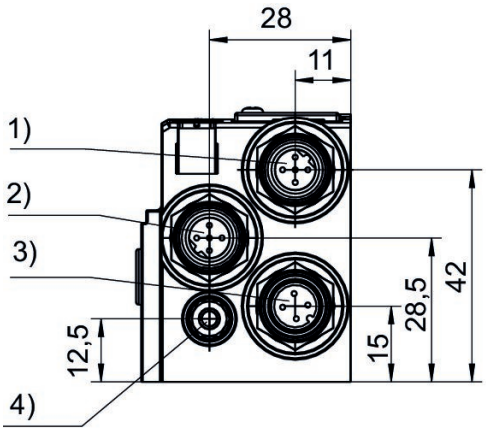

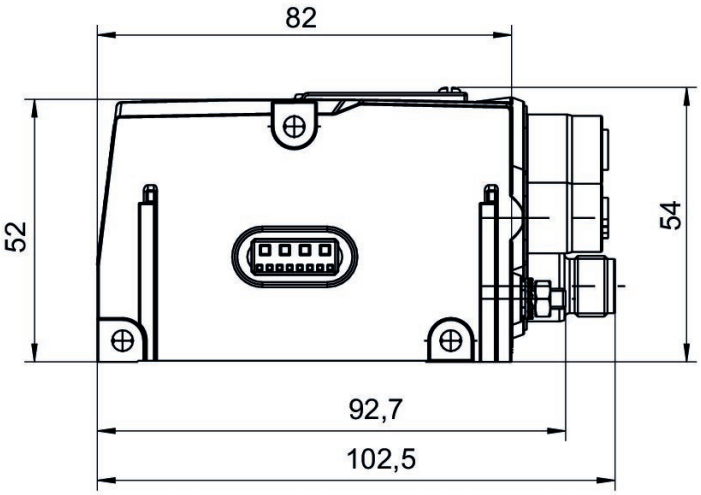

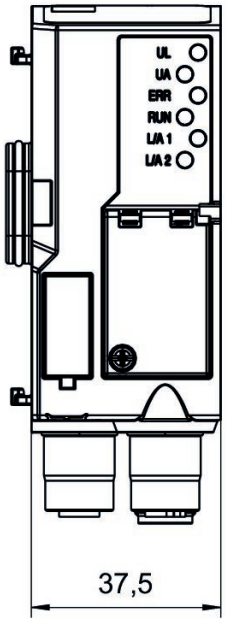

1) Fieldbus connection 2) Fieldbus connection 3) Power supply 4) Functional ground

Bus coupler, series AES

R412018221

General series information
Series AES

- The AVENTICS Series AES fieldbus connection can be integrated into all AVENTICS fieldbus-compatible valve systems or can also be configured as a stand-alone solution. AES connects your AVENTICS valve system to all relevant fieldbus protocols and offers the integration of I/O-modules and enables optimized decentralized wiring of sensors. The integration of the Digital Twin enables users to be IIoT ready and use the AES to solve their interoperability challenges.

Technical data

Industry
Industrial

Version
Bus coupler

Fieldbus protocol
DeviceNet

E/A capable
connection with I/O

Number of I/O connections
512 inputs / 512 outputs

Power plug IN type
Plug

Power plug IN size
M12x1

Power plug IN number of pole
4-pin

Power plug IN coding
A-coded

Fieldbus design
D-design

Min. ambient temperature
-10 °C

Max. ambient temperature
60 °C

Number of solenoid coils max.
128

Max. number of valve positions
64

Operational voltage electronics
24 V DC

Electronics voltage tolerance
-25% / +25%

Power consumption electronics
0.1 A

Operating voltage, actuators
24 V DC

Total current for actuators
4 A

Protection class
IP65

Cycle time at 256 bits
< 1 ms

Logic/actuator voltage
Galvanically isolated

Diagnosis
Short circuit
Undervoltage

I/O module extension max.
10

Generic emission standard in accordance with norm
EN 61000-6-4

Generic immunity standard in accordance with norm
EN 61000-6-2

Communication port Type
Plug

Communication port, Thread size
M12x1

Communication port, Number of poles
5-pin

Communication port, Coding
A-coded

Communication port 2
Socket

Communication port 2
M12x1

Communication port 2
5-pin

Communication port 2
A-coded

Weight
0.16 kg

Material

Housing material
Polyamide fiber-glass reinforced

Part No.
R412018221

Technical information

You will find assignment schemes for the product in the operating instructions, or contact the nearest AVENTICS sales office.

Voltage and short-circuit monitoring per LED.

During cyclical data transfer, the bus coupler can send 512 bits of input data to the controller and receive 512 bits of output data from the controller.

Scope of delivery: Incl. mounting screws 3x

Dimensions

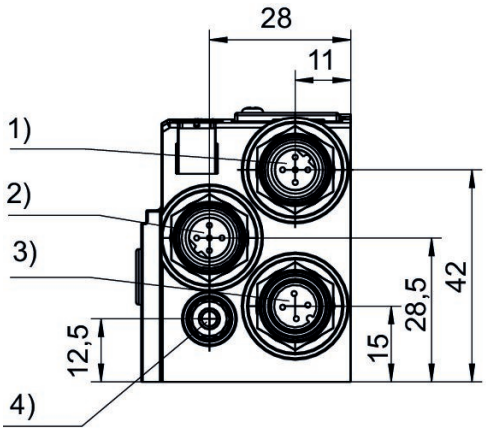

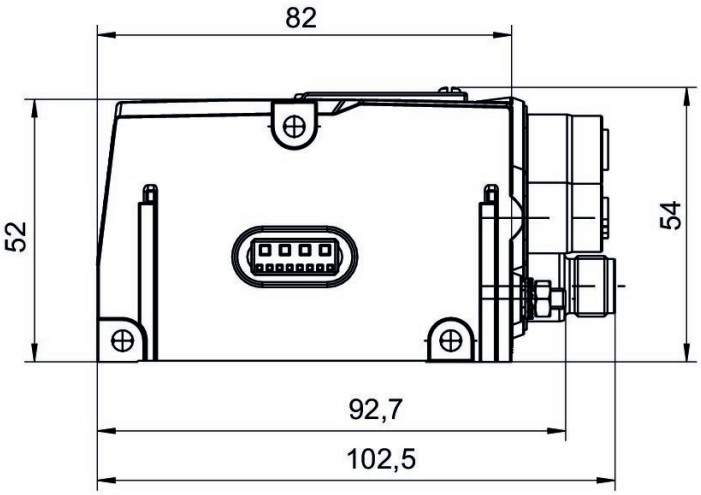

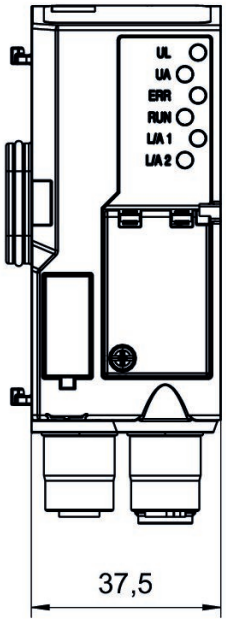

1) Fieldbus connection 2) Fieldbus connection 3) Power supply 4) Functional ground

Bus coupler, series AES

R412088222

General series information
Series AES

- The AVENTICS Series AES fieldbus connection can be integrated into all AVENTICS fieldbus-compatible valve systems or can also be configured as a stand-alone solution. AES connects your AVENTICS valve system to all relevant fieldbus protocols and offers the integration of I/O-modules and enables optimized decentralized wiring of sensors. The integration of the Digital Twin enables users to be IIoT ready and use the AES to solve their interoperability challenges.

Technical data

Industry
Industrial

Version
Bus coupler

Type
Generation 2
Note: supports DLR

Fieldbus protocol
EtherNet/IP

E/A capable
connection with I/O

Number of I/O connections
512 inputs / 512 outputs

Power plug IN type
Plug

Power plug IN size
M12x1

Power plug IN number of pole
4-pin

Power plug IN coding
A-coded

Fieldbus design
D-design

Min. ambient temperature
-10 °C

Max. ambient temperature
60 °C

Number of solenoid coils max.
128

Max. number of valve positions
64

Operational voltage electronics
24 V DC

Electronics voltage tolerance
-25% / +25%

Power consumption electronics
0.1 A

Operating voltage, actuators
24 V DC

Total current for actuators
4 A

Protection class
IP65

Cycle time at 256 bits
< 1 ms

Logic/actuator voltage
Galvanically isolated

Diagnosis
System error
Undervoltage

I/O module extension max.
10

Generic emission standard in accordance with norm
EN 61000-6-4

Generic immunity standard in accordance with norm
EN 61000-6-2

Communication port Type
Socket

Communication port, Thread size
M12x1

Communication port, Number of poles
4-pin

Communication port, Coding
D-coded

Communication port 2
Socket

Communication port 2
M12x1

Communication port 2
4-pin

Communication port 2
D-coded

Weight
0.175 kg

Material

Housing material
Polyamide fiber-glass reinforced

Part No.
R412088222

Technical information

You will find assignment schemes for the product in the operating instructions, or contact the nearest AVENTICS sales office.

Voltage and short-circuit monitoring per LED.

During cyclical data transfer, the bus coupler can send 512 bits of input data to the controller and receive 512 bits of output data from the controller.

Scope of delivery: Incl. mounting screws 3x

Dimensions

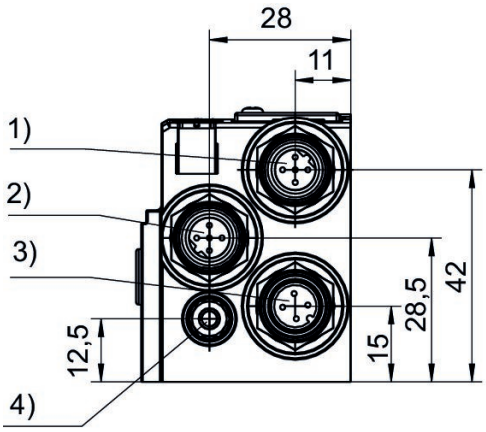

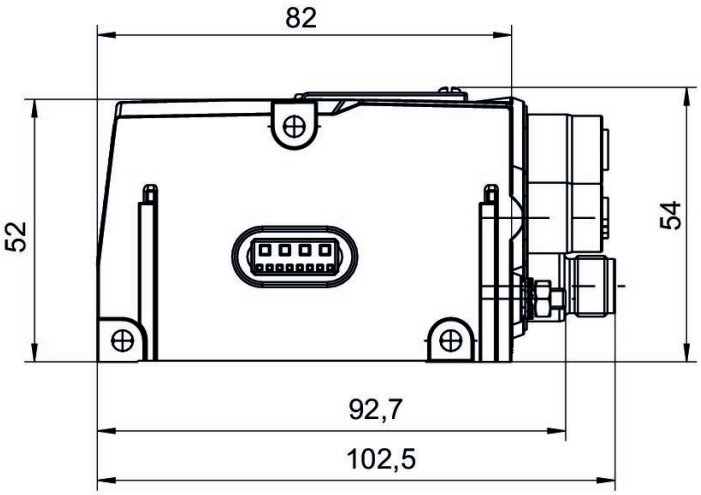

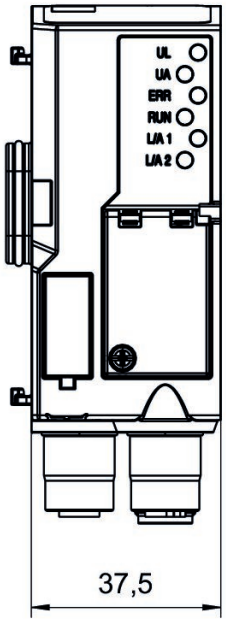

1) Fieldbus connection 2) Fieldbus connection 3) Power supply 4) Functional ground

Bus coupler, series AES

R412018222

General series information
Series AES

- The AVENTICS Series AES fieldbus connection can be integrated into all AVENTICS fieldbus-compatible valve systems or can also be configured as a stand-alone solution. AES connects your AVENTICS valve system to all relevant fieldbus protocols and offers the integration of I/O-modules and enables optimized decentralized wiring of sensors. The integration of the Digital Twin enables users to be IIoT ready and use the AES to solve their interoperability challenges.

Technical data

Industry
Industrial

Version
Bus coupler

Note
Do not use in new constructions!

Fieldbus protocol
EtherNet/IP

E/A capable
connection with I/O

Number of I/O connections
512 inputs / 512 outputs

Power plug IN type
Plug

Power plug IN size
M12x1

Power plug IN number of pole
4-pin

Power plug IN coding
A-coded

Fieldbus design
D-design

Min. ambient temperature
-10 °C

Max. ambient temperature
60 °C

Number of solenoid coils max.
128

Max. number of valve positions
64

Operational voltage electronics
24 V DC

Electronics voltage tolerance
-25% / +25%

Power consumption electronics
0.1 A

Operating voltage, actuators
24 V DC

Total current for actuators
4 A

Protection class
IP65

Cycle time at 256 bits
< 1 ms

Logic/actuator voltage
Galvanically isolated

Diagnosis
System error
Undervoltage

I/O module extension max.
10

Generic emission standard in accordance with norm
EN 61000-6-4

Generic immunity standard in accordance with norm
EN 61000-6-2

Communication port Type
Socket

Communication port, Thread size
M12x1

Communication port, Number of poles
4-pin

Communication port, Coding
D-coded

Communication port 2
Socket

Communication port 2
M12x1

Communication port 2
4-pin

Communication port 2
D-coded

Weight
0.175 kg

Material

Housing material
Polyamide fiber-glass reinforced

Part No.
R412018222

Technical information

You will find assignment schemes for the product in the operating instructions, or contact the nearest AVENTICS sales office.

Voltage and short-circuit monitoring per LED.

During cyclical data transfer, the bus coupler can send 512 bits of input data to the controller and receive 512 bits of output data from the controller.

Scope of delivery: Incl. mounting screws 3x

Dimensions

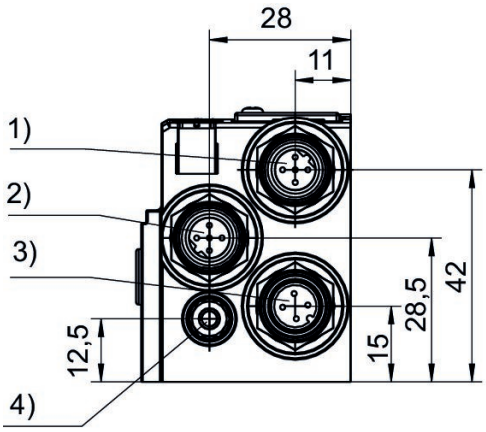

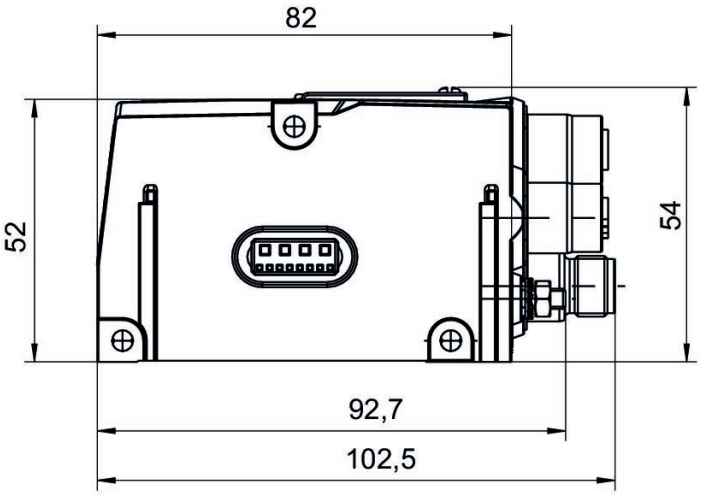

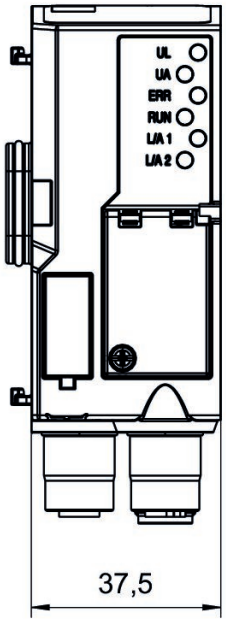

1) Fieldbus connection 2) Fieldbus connection 3) Power supply 4) Functional ground

Bus coupler, series AES

R412088223

General series information
Series AES

- The AVENTICS Series AES fieldbus connection can be integrated into all AVENTICS fieldbus-compatible valve systems or can also be configured as a stand-alone solution. AES connects your AVENTICS valve system to all relevant fieldbus protocols and offers the integration of I/O-modules and enables optimized decentralized wiring of sensors. The integration of the Digital Twin enables users to be IIoT ready and use the AES to solve their interoperability challenges.

Technical data

Industry
Industrial

Version
Bus coupler

Type
Generation 2
Note: supports MRP and IRT (RT_CLASS 3)

Fieldbus protocol
PROFINET IO

E/A capable
connection with I/O

Number of I/O connections
512 inputs / 512 outputs

Power plug IN type
Plug

Power plug IN size
M12x1

Power plug IN number of pole
4-pin

Power plug IN coding
A-coded

Fieldbus design
D-design

Min. ambient temperature
-10 °C

Max. ambient temperature
60 °C

Number of solenoid coils max.
128

Max. number of valve positions
64

Operational voltage electronics
24 V DC

Electronics voltage tolerance
-25% / +25%

Power consumption electronics
0.1 A

Operating voltage, actuators
24 V DC

Total current for actuators
4 A

Protection class
IP65

Cycle time at 256 bits
< 1 ms

Logic/actuator voltage
Galvanically isolated

Diagnosis
System error
Undervoltage

I/O module extension max.
10

Generic emission standard in accordance with norm
EN 61000-6-4

Generic immunity standard in accordance with norm
EN 61000-6-2

Communication port Type
Socket

Communication port, Thread size
M12x1

Communication port, Number of poles
4-pin

Communication port, Coding
D-coded

Communication port 2
Socket

Communication port 2
M12x1

Communication port 2
4-pin

Communication port 2
D-coded

Weight
0.175 kg

Material

Housing material
Polyamide fiber-glass reinforced

Part No.
R412088223

Technical information

You will find assignment schemes for the product in the operating instructions, or contact the nearest AVENTICS sales office.

Voltage and short-circuit monitoring per LED.

During cyclical data transfer, the bus coupler can send 512 bits of input data to the controller and receive 512 bits of output data from the controller.

Scope of delivery: Incl. mounting screws 3x

Dimensions

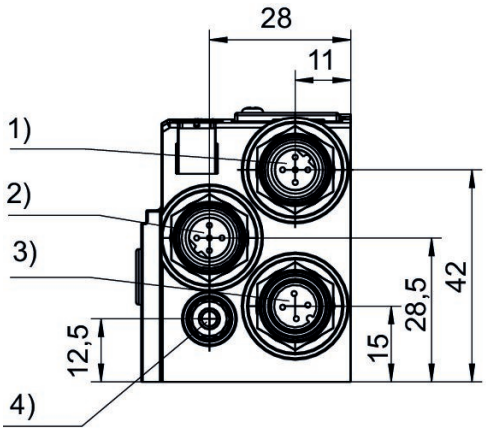

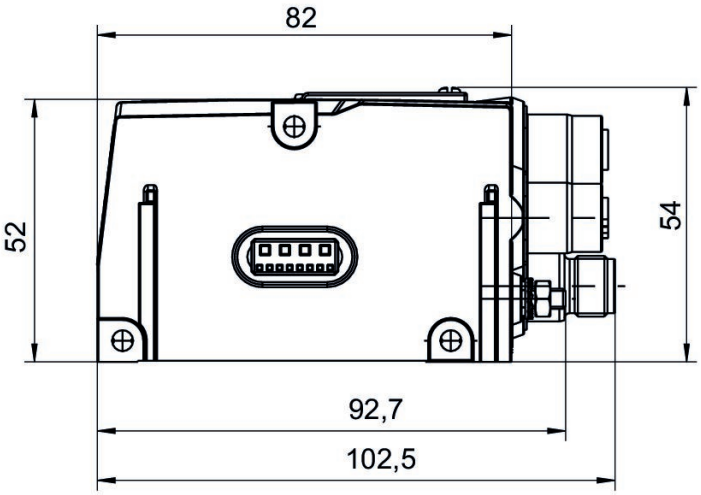

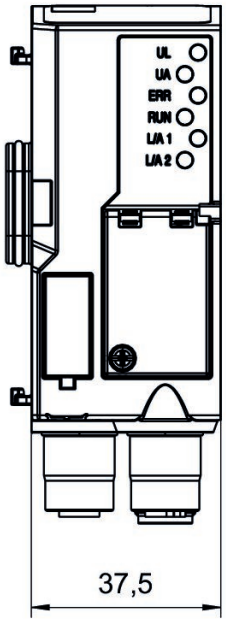

1) Fieldbus connection 2) Fieldbus connection 3) Power supply 4) Functional ground

Bus coupler, series AES

R412018223

General series information
Series AES

- The AVENTICS Series AES fieldbus connection can be integrated into all AVENTICS fieldbus-compatible valve systems or can also be configured as a stand-alone solution. AES connects your AVENTICS valve system to all relevant fieldbus protocols and offers the integration of I/O-modules and enables optimized decentralized wiring of sensors. The integration of the Digital Twin enables users to be IIoT ready and use the AES to solve their interoperability challenges.

Technical data

Industry
Industrial

Version
Bus coupler

Note
Do not use in new constructions!

Fieldbus protocol
PROFINET IO

E/A capable
connection with I/O

Number of I/O connections
512 inputs / 512 outputs

Power plug IN type
Plug

Power plug IN size
M12x1

Power plug IN number of pole
4-pin

Power plug IN coding
A-coded

Fieldbus design
D-design

Min. ambient temperature
-10 °C

Max. ambient temperature
60 °C

Number of solenoid coils max.
128

Max. number of valve positions
64

Operational voltage electronics
24 V DC

Electronics voltage tolerance
-25% / +25%

Power consumption electronics
0.1 A

Operating voltage, actuators
24 V DC

Total current for actuators
4 A

Protection class
IP65

Cycle time at 256 bits
< 1 ms

Logic/actuator voltage
Galvanically isolated

Diagnosis
System error
Undervoltage

I/O module extension max.
10

Generic emission standard in accordance with norm
EN 61000-6-4

Generic immunity standard in accordance with norm
EN 61000-6-2

Communication port Type
Socket

Communication port, Thread size
M12x1

Communication port, Number of poles
4-pin

Communication port, Coding
D-coded

Communication port 2
Socket

Communication port 2
M12x1

Communication port 2
4-pin

Communication port 2
D-coded

Weight
0.175 kg

Material

Housing material
Polyamide fiber-glass reinforced

Part No.
R412018223

Technical information

You will find assignment schemes for the product in the operating instructions, or contact the nearest AVENTICS sales office.

Voltage and short-circuit monitoring per LED.

During cyclical data transfer, the bus coupler can send 512 bits of input data to the controller and receive 512 bits of output data from the controller.

Scope of delivery: Incl. mounting screws 3x

Dimensions

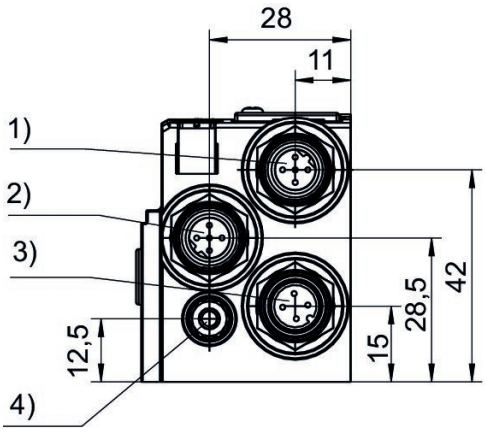

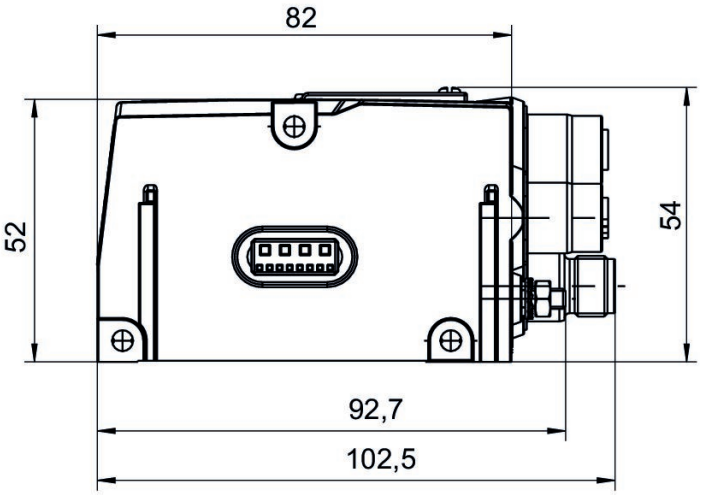

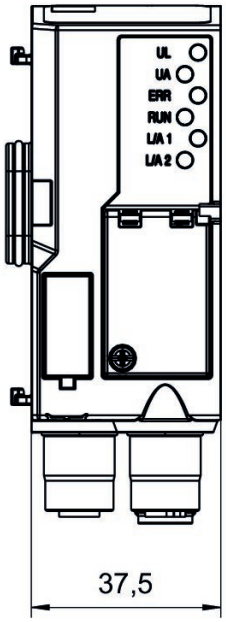

1) Fieldbus connection 2) Fieldbus connection 3) Power supply 4) Functional ground

Bus coupler, series AES

R412088225

General series information
Series AES

- The AVENTICS Series AES fieldbus connection can be integrated into all AVENTICS fieldbus-compatible valve systems or can also be configured as a stand-alone solution. AES connects your AVENTICS valve system to all relevant fieldbus protocols and offers the integration of I/O-modules and enables optimized decentralized wiring of sensors. The integration of the Digital Twin enables users to be IIoT ready and use the AES to solve their interoperability challenges.

Technical data

Industry
Industrial

Version
Bus coupler

Type
Generation 2

Fieldbus protocol
EtherCAT

E/A capable
connection with I/O

Number of I/O connections
512 inputs / 512 outputs

Power plug IN type
Plug

Power plug IN size
M12x1

Power plug IN number of pole
4-pin

Power plug IN coding
A-coded

Fieldbus design
D-design

Min. ambient temperature
-10 °C

Max. ambient temperature
60 °C

Number of solenoid coils max.
128

Max. number of valve positions
64

Operational voltage electronics
24 V DC

Electronics voltage tolerance
-25% / +25%

Power consumption electronics
0.1 A

Operating voltage, actuators
24 V DC

Total current for actuators
4 A

Protection class
IP65

Cycle time at 256 bits
< 1 ms

Logic/actuator voltage
Galvanically isolated

Diagnosis
System error
Undervoltage

I/O module extension max.
10

Generic emission standard in accordance with norm
EN 61000-6-4

Generic immunity standard in accordance with norm
EN 61000-6-2

Communication port Type
Socket

Communication port, Thread size
M12x1

Communication port, Number of poles
4-pin

Communication port, Coding
D-coded

Communication port 2
Socket

Communication port 2
M12x1

Communication port 2
4-pin

Communication port 2
D-coded

Weight
0.175 kg

Material

Housing material
Polyamide fiber-glass reinforced

Part No.
R412088225

Technical information

You will find assignment schemes for the product in the operating instructions, or contact the nearest AVENTICS sales office.

Voltage and short-circuit monitoring per LED.

During cyclical data transfer, the bus coupler can send 512 bits of input data to the controller and receive 512 bits of output data from the controller.

Scope of delivery: Incl. mounting screws 3x

Dimensions

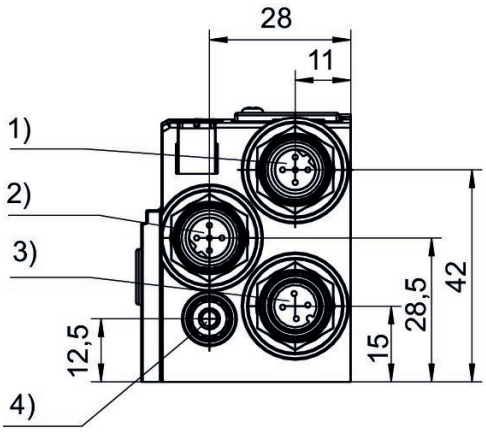

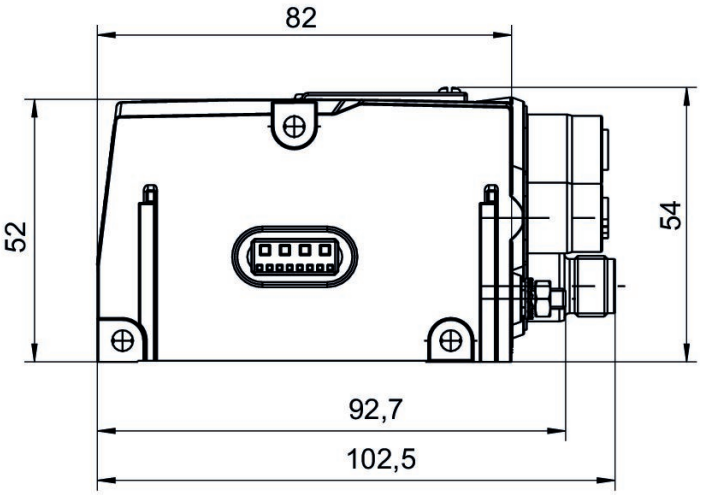

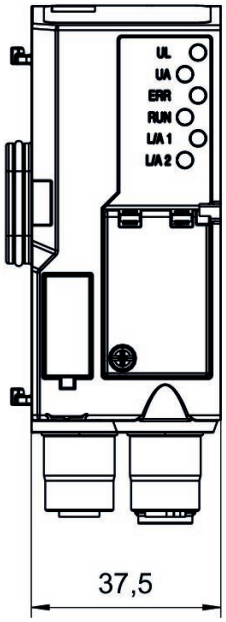

1) Fieldbus connection 2) Fieldbus connection 3) Power supply 4) Functional ground

Bus coupler, series AES

R412018225

General series information
Series AES

- The AVENTICS Series AES fieldbus connection can be integrated into all AVENTICS fieldbus-compatible valve systems or can also be configured as a stand-alone solution. AES connects your AVENTICS valve system to all relevant fieldbus protocols and offers the integration of I/O-modules and enables optimized decentralized wiring of sensors. The integration of the Digital Twin enables users to be IIoT ready and use the AES to solve their interoperability challenges.

Technical data

Industry
Industrial

Version
Bus coupler

Note
Do not use in new constructions!

Fieldbus protocol
EtherCAT

E/A capable
connection with I/O

Number of I/O connections
512 inputs / 512 outputs

Power plug IN type
Plug

Power plug IN size
M12x1

Power plug IN number of pole
4-pin

Power plug IN coding
A-coded

Fieldbus design
D-design

Min. ambient temperature
-10 °C

Max. ambient temperature
60 °C

Number of solenoid coils max.
128

Max. number of valve positions
64

Operational voltage electronics
24 V DC

Electronics voltage tolerance
-25% / +25%

Power consumption electronics
0.1 A

Operating voltage, actuators
24 V DC

Total current for actuators
4 A

Protection class
IP65

Cycle time at 256 bits
< 1 ms

Logic/actuator voltage
Galvanically isolated

Diagnosis
System error
Undervoltage

I/O module extension max.
10

Generic emission standard in accordance with norm
EN 61000-6-4

Generic immunity standard in accordance with norm
EN 61000-6-2

Communication port Type
Socket

Communication port, Thread size
M12x1

Communication port, Number of poles
4-pin

Communication port, Coding
D-coded

Communication port 2
Socket

Communication port 2
M12x1

Communication port 2
4-pin

Communication port 2
D-coded

Weight
0.175 kg

Material

Housing material
Polyamide fiber-glass reinforced

Part No.
R412018225

Technical information

You will find assignment schemes for the product in the operating instructions, or contact the nearest AVENTICS sales office.

Voltage and short-circuit monitoring per LED.

During cyclical data transfer, the bus coupler can send 512 bits of input data to the controller and receive 512 bits of output data from the controller.

Scope of delivery: Incl. mounting screws 3x

Dimensions

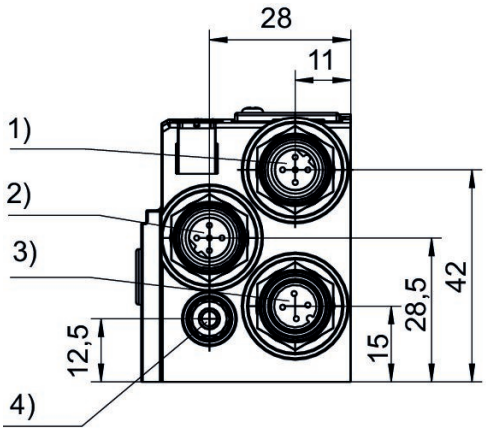

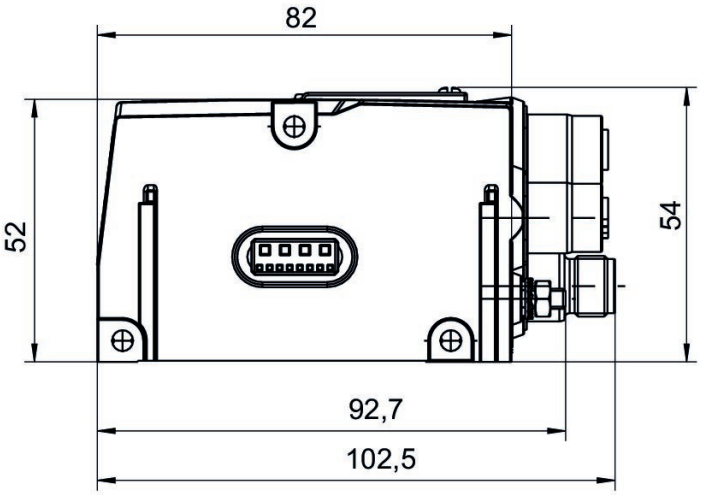

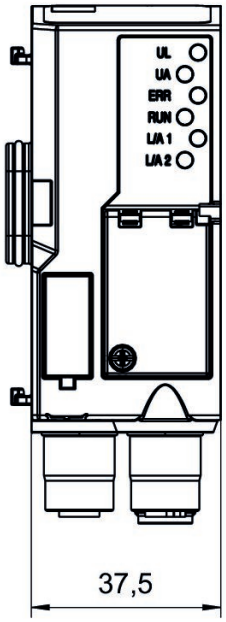

1) Fieldbus connection 2) Fieldbus connection 3) Power supply 4) Functional ground

Bus coupler, series AES

R412088226

General series information
Series AES

- The AVENTICS Series AES fieldbus connection can be integrated into all AVENTICS fieldbus-compatible valve systems or can also be configured as a stand-alone solution. AES connects your AVENTICS valve system to all relevant fieldbus protocols and offers the integration of I/O-modules and enables optimized decentralized wiring of sensors. The integration of the Digital Twin enables users to be IIoT ready and use the AES to solve their interoperability challenges.

Technical data

Industry
Industrial

Version
Bus coupler

Type
Generation 2

Fieldbus protocol
POWERLINK

E/A capable
connection with I/O

Number of I/O connections
512 inputs / 512 outputs

Power plug IN type
Plug

Power plug IN size
M12x1

Power plug IN number of pole
4-pin

Power plug IN coding
A-coded

Fieldbus design
D-design

Min. ambient temperature
-10 °C

Max. ambient temperature
60 °C

Number of solenoid coils max.
128

Max. number of valve positions
64

Operational voltage electronics
24 V DC

Electronics voltage tolerance
-25% / +25%

Power consumption electronics
0.1 A

Operating voltage, actuators
24 V DC

Total current for actuators
4 A

Protection class
IP65

Cycle time at 256 bits
< 1 ms

Logic/actuator voltage
Galvanically isolated

Diagnosis
System error
Undervoltage

I/O module extension max.
10

Generic emission standard in accordance with norm
EN 61000-6-4

Generic immunity standard in accordance with norm
EN 61000-6-2

Communication port Type
Socket

Communication port, Thread size
M12x1

Communication port, Number of poles
4-pin

Communication port, Coding
D-coded

Communication port 2
Socket

Communication port 2
M12x1

Communication port 2
4-pin

Communication port 2
D-coded

Weight
0.175 kg

Material

Housing material
Polyamide fiber-glass reinforced

Part No.
R412088226

Technical information

You will find assignment schemes for the product in the operating instructions, or contact the nearest AVENTICS sales office.

Voltage and short-circuit monitoring per LED.

During cyclical data transfer, the bus coupler can send 512 bits of input data to the controller and receive 512 bits of output data from the controller.

Scope of delivery: Incl. mounting screws 3x

Dimensions

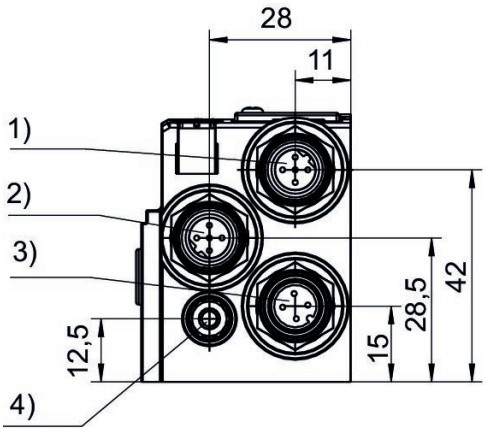

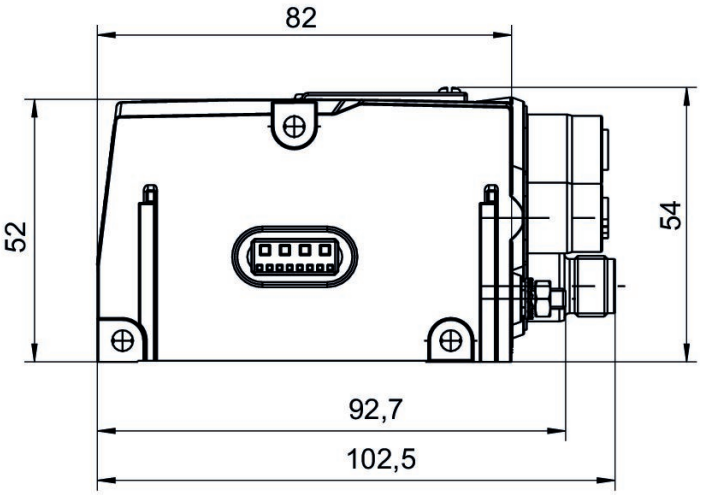

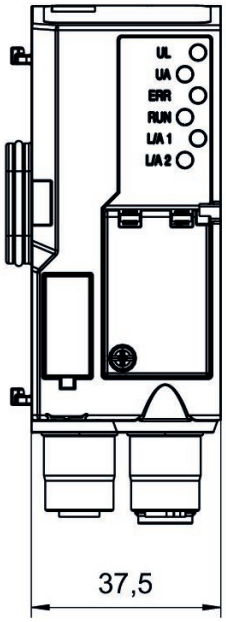

1) Fieldbus connection 2) Fieldbus connection 3) Power supply 4) Functional ground

Bus coupler, series AES

R412018226

General series information
Series AES

- The AVENTICS Series AES fieldbus connection can be integrated into all AVENTICS fieldbus-compatible valve systems or can also be configured as a stand-alone solution. AES connects your AVENTICS valve system to all relevant fieldbus protocols and offers the integration of I/O-modules and enables optimized decentralized wiring of sensors. The integration of the Digital Twin enables users to be IIoT ready and use the AES to solve their interoperability challenges.

Technical data

Industry
Industrial

Version
Bus coupler

Note
Do not use in new constructions!

Fieldbus protocol
POWERLINK

E/A capable
connection with I/O

Number of I/O connections
512 inputs / 512 outputs

Power plug IN type
Plug

Power plug IN size
M12x1

Power plug IN number of pole
4-pin

Power plug IN coding
A-coded

Fieldbus design
D-design

Min. ambient temperature
-10 °C

Max. ambient temperature
60 °C

Number of solenoid coils max.
128

Max. number of valve positions
64

Operational voltage electronics
24 V DC

Electronics voltage tolerance
-25% / +25%

Power consumption electronics
0.1 A

Operating voltage, actuators
24 V DC

Total current for actuators
4 A

Protection class
IP65

Cycle time at 256 bits
< 1 ms

Logic/actuator voltage
Galvanically isolated

Diagnosis
System error
Undervoltage

I/O module extension max.
10

Generic emission standard in accordance with norm
EN 61000-6-4

Generic immunity standard in accordance with norm
EN 61000-6-2

Communication port Type
Socket

Communication port, Thread size
M12x1

Communication port, Number of poles
4-pin

Communication port, Coding
D-coded

Communication port 2
Socket

Communication port 2
M12x1

Communication port 2
4-pin

Communication port 2
D-coded

Weight
0.175 kg

Material

Housing material
Polyamide fiber-glass reinforced

Part No.
R412018226

Technical information

You will find assignment schemes for the product in the operating instructions, or contact the nearest AVENTICS sales office.

Voltage and short-circuit monitoring per LED.

During cyclical data transfer, the bus coupler can send 512 bits of input data to the controller and receive 512 bits of output data from the controller.

Scope of delivery: Incl. mounting screws 3x

Dimensions

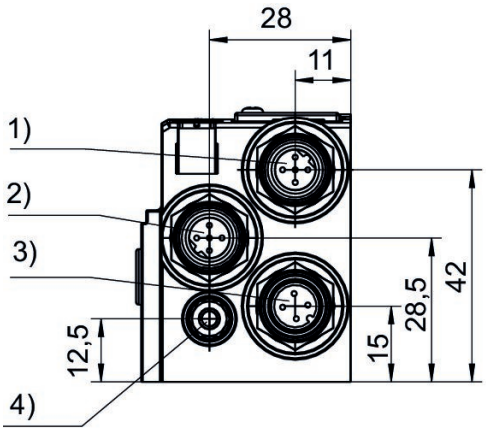

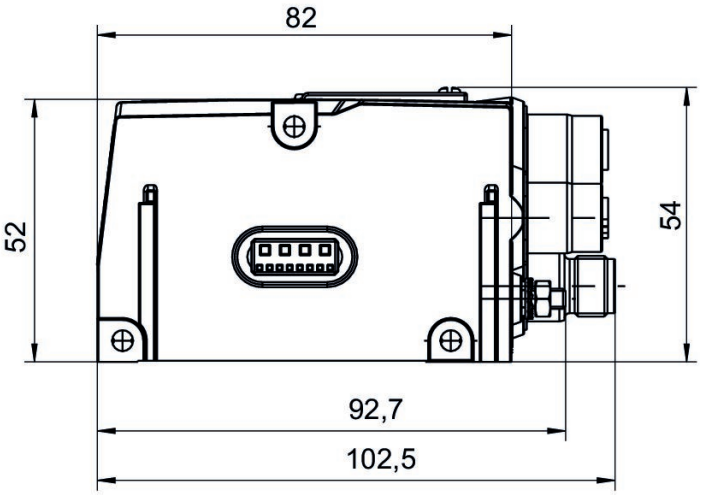

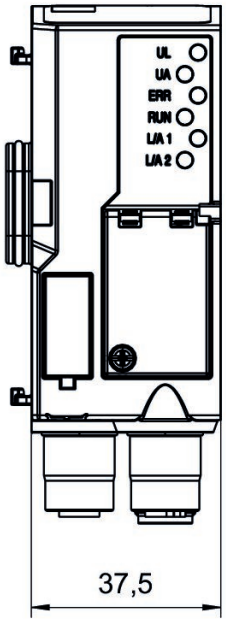

1) Fieldbus connection 2) Fieldbus connection 3) Power supply 4) Functional ground

Bus coupler, series AES

R412088227

General series information
Series AES

- The AVENTICS Series AES fieldbus connection can be integrated into all AVENTICS fieldbus-compatible valve systems or can also be configured as a stand-alone solution. AES connects your AVENTICS valve system to all relevant fieldbus protocols and offers the integration of I/O-modules and enables optimized decentralized wiring of sensors. The integration of the Digital Twin enables users to be IIoT ready and use the AES to solve their interoperability challenges.

Technical data

Industry
Industrial

Version
Bus coupler

Type
Generation 2

Fieldbus protocol
MODBUS TCP

E/A capable
connection with I/O

Number of I/O connections
512 inputs / 512 outputs

Power plug IN type
Plug

Power plug IN size
M12x1

Power plug IN number of pole
4-pin

Power plug IN coding
A-coded

Fieldbus design
D-design

Min. ambient temperature
-10 °C

Max. ambient temperature
60 °C

Number of solenoid coils max.
128

Max. number of valve positions
64

Operational voltage electronics
24 V DC

Electronics voltage tolerance
-25% / +25%

Power consumption electronics
0.1 A

Operating voltage, actuators
24 V DC

Total current for actuators
4 A

Protection class
IP65

Cycle time at 256 bits
< 1 ms

Logic/actuator voltage
Galvanically isolated

Diagnosis
System error
Undervoltage

I/O module extension max.
10

Generic emission standard in accordance with norm
EN 61000-6-4

Generic immunity standard in accordance with norm
EN 61000-6-2

Communication port Type
Socket

Communication port, Thread size
M12x1

Communication port, Number of poles
4-pin

Communication port, Coding
D-coded

Communication port 2
Socket

Communication port 2
M12x1

Communication port 2
4-pin

Communication port 2
D-coded

Weight
0.175 kg

Material

Housing material
Polyamide fiber-glass reinforced

Part No.
R412088227

Technical information

You will find assignment schemes for the product in the operating instructions, or contact the nearest AVENTICS sales office.

Voltage and short-circuit monitoring per LED.

During cyclical data transfer, the bus coupler can send 512 bits of input data to the controller and receive 512 bits of output data from the controller.

Scope of delivery: Incl. mounting screws 3x

Dimensions

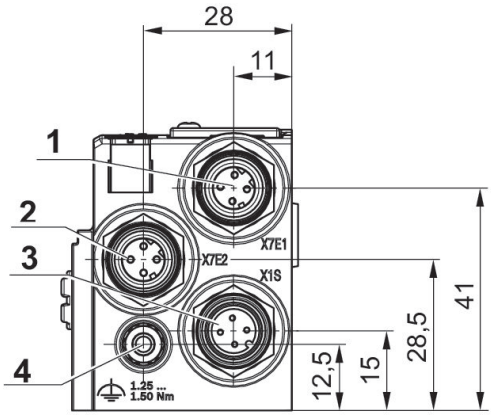

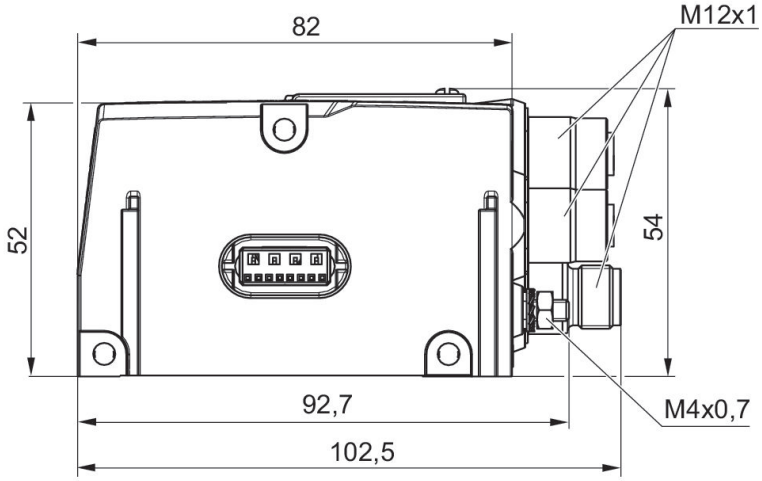

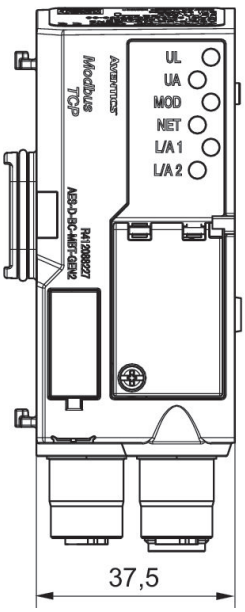

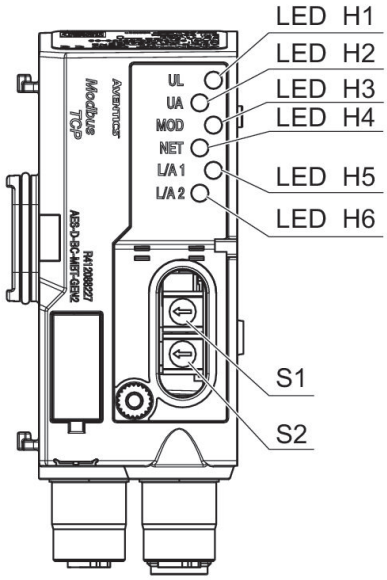

1) Fieldbus connection 2) Fieldbus connection 3) Power supply 4) Functional ground

Pin assignment, socket

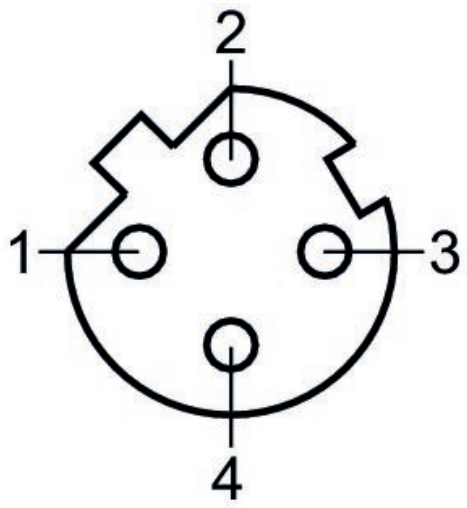

Plug pin assignment

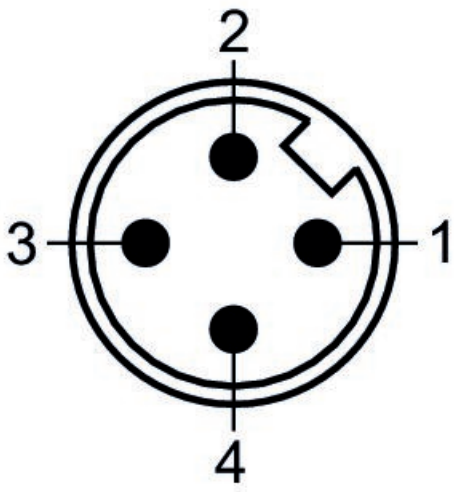

I/O modules, series AES

R412018269

General series information
Series AES

- The AVENTICS Series AES fieldbus connection can be integrated into all AVENTICS fieldbus-compatible valve systems or can also be configured as a stand-alone solution. AES connects your AVENTICS valve system to all relevant fieldbus protocols and offers the integration of I/O-modules and enables optimized decentralized wiring of sensors. The integration of the Digital Twin enables users to be IIoT ready and use the AES to solve their interoperability challenges.

Technical data

Industry
Industrial

Version
I/O modules

Type
8DIDO8M8

Note
Combination module

E/A capable
connection with I/O

I/O module version
digital inputs/outputs

Number of I/O connections
8 inputs / 8 outputs

Power plug IN type
Internal

Signal connection E/A type
Socket

Signal connection E/A thread size
M8x1

Signal connection E/A number of poles
3-pin

Filter time
3 ms

Min. ambient temperature
-10 °C

Max. ambient temperature
60 °C

Operational voltage electronics
24 V DC

Electronics voltage tolerance
-25% / +25%

Max. current per channel
0.5 A

Total current for actuators
4 A

Protection class
IP65

Total current of sensors max.
1 A

Logic/actuator voltage
Galvanically isolated

Diagnosis
Short circuit
Undervoltage

Number of inputs
8

Number of outputs
8

Generic emission standard in accordance with norm
EN 61000-6-4

Generic immunity standard in accordance with norm
EN 61000-6-2

Weight
0.11 kg

Material

Housing material
Polyamide fiber-glass reinforced

Part No.
R412018269

Technical information

You will find assignment schemes for the product in the operating instructions, or contact the nearest AVENTICS sales office.

The total current of all outputs (including valves) must not exceed 4 A in the overall system.

Voltage and short-circuit monitoring per LED.

Delivery contents: incl. 2 spring clamp elements and seal

Function specification for fieldbus configuration.

Dimensions

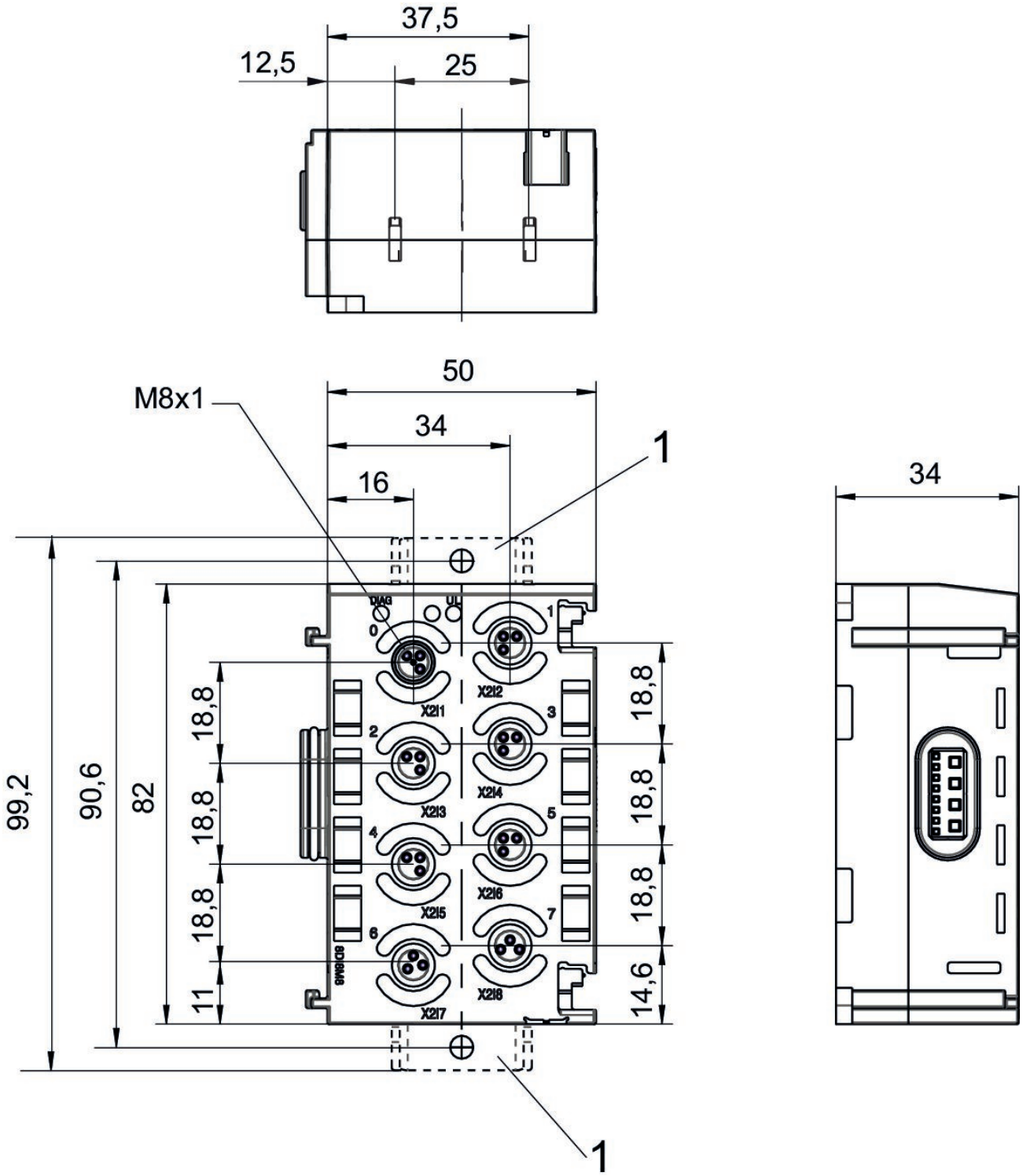

1) Retaining bracket (optional)
Pin assignment M8x1 (3-pin)

Pin assignments

PNP

3-pin

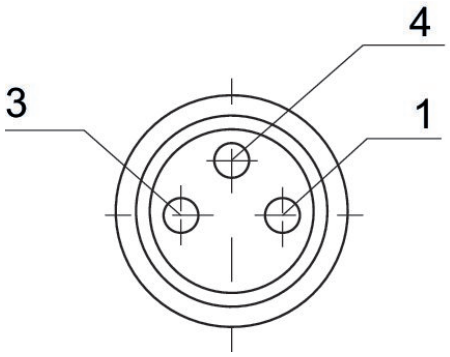

Pin	Input module	Output module
1	24 V DC	-
3	0 V DC	0 V DC
4	Input signal	Output signal

I/O modules, series AES

R412018233

General series information
Series AES

- The AVENTICS Series AES fieldbus connection can be integrated into all AVENTICS fieldbus-compatible valve systems or can also be configured as a stand-alone solution. AES connects your AVENTICS valve system to all relevant fieldbus protocols and offers the integration of I/O-modules and enables optimized decentralized wiring of sensors. The integration of the Digital Twin enables users to be IIoT ready and use the AES to solve their interoperability challenges.

Technical data

Industry
Industrial

Version
I/O modules

Type
8DI8M8

E/A capable
connection with I/O

I/O module version
digital inputs

Number of I/O connections
8 inputs

Power plug IN type
Internal

Signal connection E/A type
Socket

Signal connection E/A thread size
M8x1

Signal connection E/A number of poles
3-pin

Filter time
3 ms

Min. ambient temperature
-10 °C

Max. ambient temperature
60 °C

Operational voltage electronics
24 V DC

Electronics voltage tolerance
-25% / +25%

Max. current per channel
0.5 A

Protection class
IP65

Total current of sensors max.
1 A

Diagnosis
Short circuit
Undervoltage

Number of inputs
8

Generic emission standard in accordance with norm
EN 61000-6-4

Generic immunity standard in accordance with norm
EN 61000-6-2

Weight
0.11 kg

Material

Housing material
Polyamide fiber-glass reinforced

Part No.
R412018233

Technical information

You will find assignment schemes for the product in the operating instructions, or contact the nearest AVENTICS sales office.

The total current of all outputs (including valves) must not exceed 4 A in the overall system.

Voltage and short-circuit monitoring per LED.

Delivery contents: incl. 2 spring clamp elements and seal

Dimensions

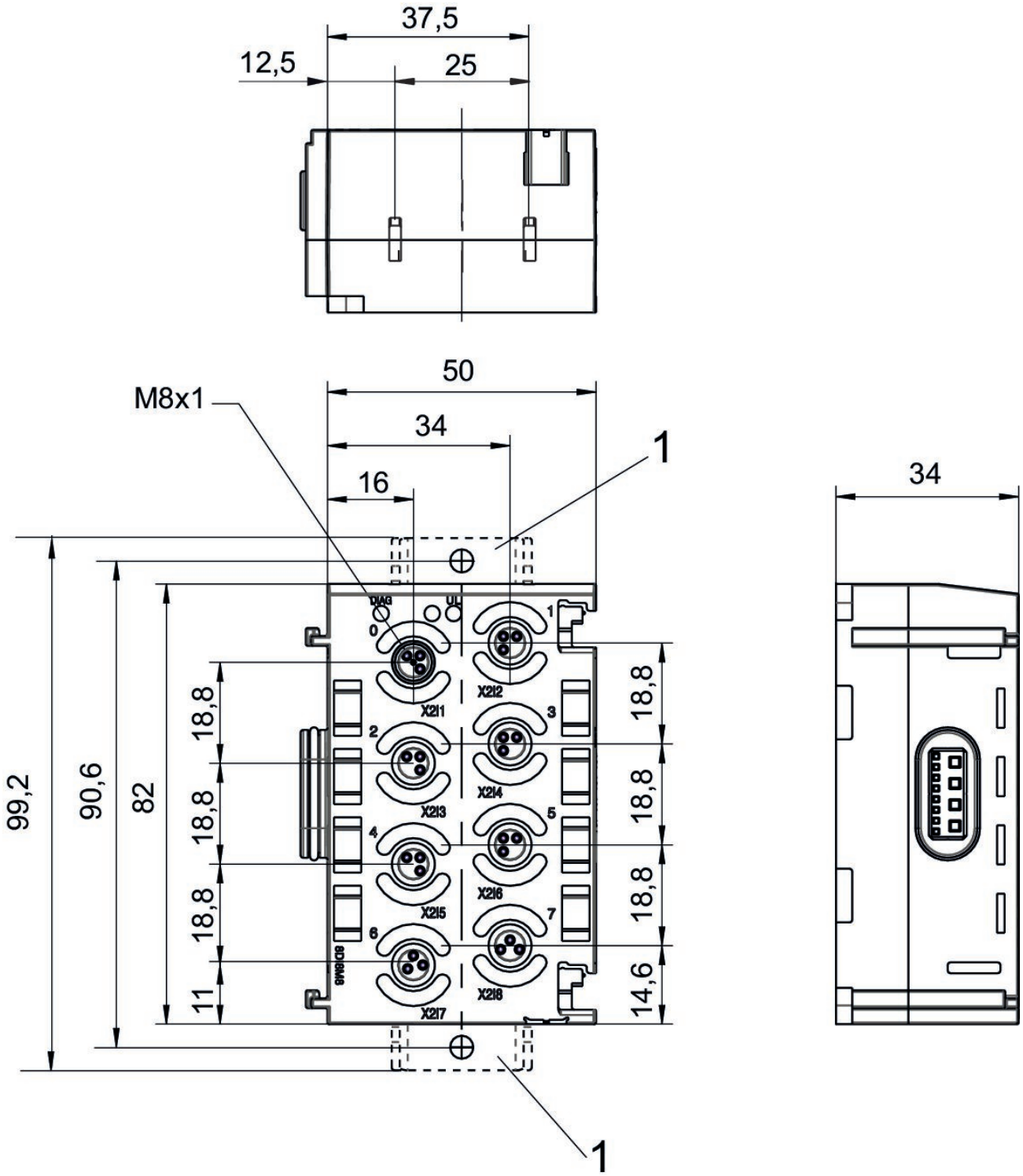

1) Retaining bracket (optional)
Pin assignment M8x1 (3-pin)

Pin assignments

PNP

3-pin

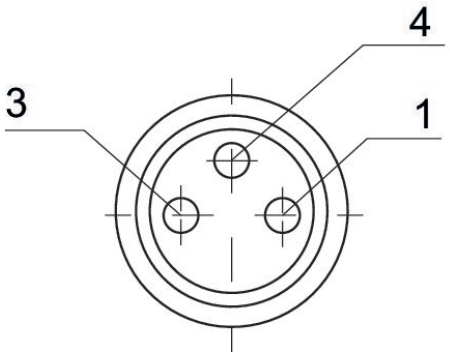

Pin	Input module	Output module
1	24 V DC	-
3	0 V DC	0 V DC
4	Input signal	Output signal

I/O modules, series AES

R412018248

General series information
Series AES

- The AVENTICS Series AES fieldbus connection can be integrated into all AVENTICS fieldbus-compatible valve systems or can also be configured as a stand-alone solution. AES connects your AVENTICS valve system to all relevant fieldbus protocols and offers the integration of I/O-modules and enables optimized decentralized wiring of sensors. The integration of the Digital Twin enables users to be IIoT ready and use the AES to solve their interoperability challenges.

Technical data

Industry
Industrial

Version
I/O modules

Type
8DO8M8

E/A capable
connection with I/O

I/O module version
digital outputs

Number of I/O connections
8 outputs

Power plug IN type
Internal

Signal connection E/A type
Socket

Signal connection E/A thread size
M8x1

Signal connection E/A number of poles
3-pin

Filter time
3 ms

Min. ambient temperature
-10 °C

Max. ambient temperature
60 °C

Operational voltage electronics
24 V DC

Electronics voltage tolerance
-25% / +25%

Max. current per channel
0.5 A

Total current for actuators
4 A

Protection class
IP65

Total current of sensors max.
1 A

Logic/actuator voltage
Galvanically isolated

Diagnosis
Short circuit
Undervoltage

Number of outputs
8

Generic emission standard in accordance with norm
EN 61000-6-4

Generic immunity standard in accordance with norm
EN 61000-6-2

Weight
0.11 kg

Material

Housing material
Polyamide fiber-glass reinforced

Part No.
R412018248

Technical information

You will find assignment schemes for the product in the operating instructions, or contact the nearest AVENTICS sales office.

The total current of all outputs (including valves) must not exceed 4 A in the overall system.

Voltage and short-circuit monitoring per LED.

Delivery contents: incl. 2 spring clamp elements and seal

Dimensions

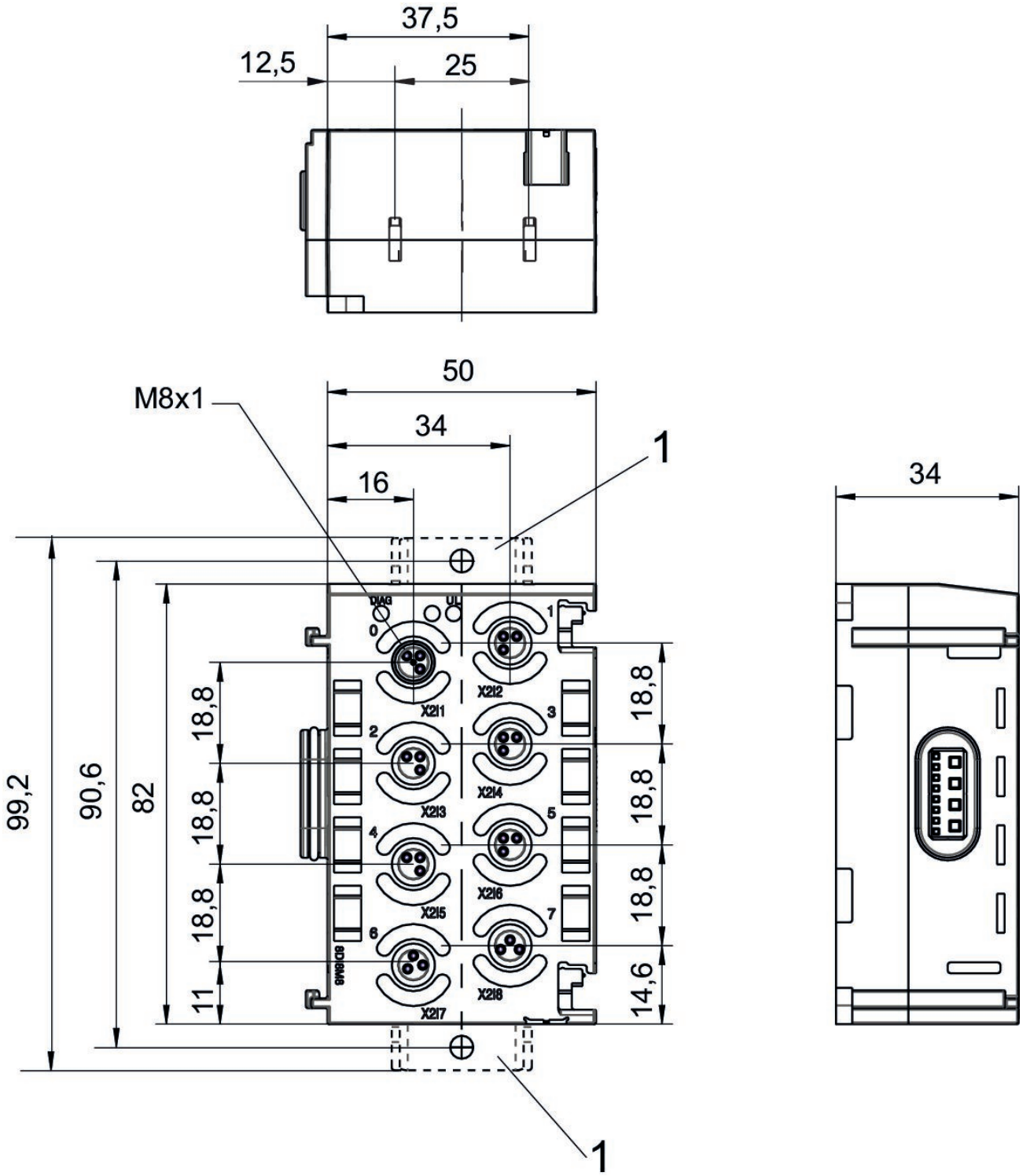

1) Retaining bracket (optional)
Pin assignment M8x1 (3-pin)

Pin assignments

PNP

3-pin

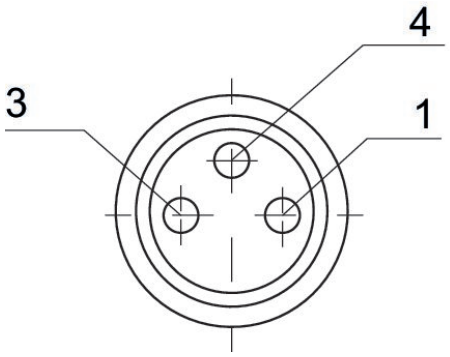

Pin	Input module	Output module
1	24 V DC	-
3	0 V DC	0 V DC
4	Input signal	Output signal

I/O modules, Series AES

R412018234

General series information
Series AES

- The AVENTICS Series AES fieldbus connection can be integrated into all AVENTICS fieldbus-compatible valve systems or can also be configured as a stand-alone solution. AES connects your AVENTICS valve system to all relevant fieldbus protocols and offers the integration of I/O-modules and enables optimized decentralized wiring of sensors. The integration of the Digital Twin enables users to be IIoT ready and use the AES to solve their interoperability challenges.

Technical data

Industry
Industrial

Version
I/O modules

Type
16DI8M8

E/A capable
connection with I/O

I/O module version
digital inputs

Number of I/O connections
16 inputs

Power plug IN type
Internal

Signal connection E/A type
Socket

Signal connection E/A thread size
M8x1

Signal connection E/A number of poles
4-pin

Filter time
3 ms

Min. ambient temperature
-10 °C

Max. ambient temperature
60 °C

Operational voltage electronics
24 V DC

Electronics voltage tolerance
-25% / +25%

Max. current per channel
0.5 A

Protection class
IP65

Total current of sensors max.
1 A

Diagnosis
Short circuit
Undervoltage

Generic emission standard in accordance with norm
EN 61000-6-4

Generic immunity standard in accordance with norm
EN 61000-6-2

Weight
0.11 kg

Material

Housing material
Polyamide fiber-glass reinforced

Part No.
R412018234

Technical information

You will find assignment schemes for the product in the operating instructions, or contact the nearest AVENTICS sales office.

The total current of all outputs (including valves) must not exceed 4 A in the overall system.

Voltage and short-circuit monitoring per LED.

Delivery contents: incl. 2 spring clamp elements and seal

Dimensions

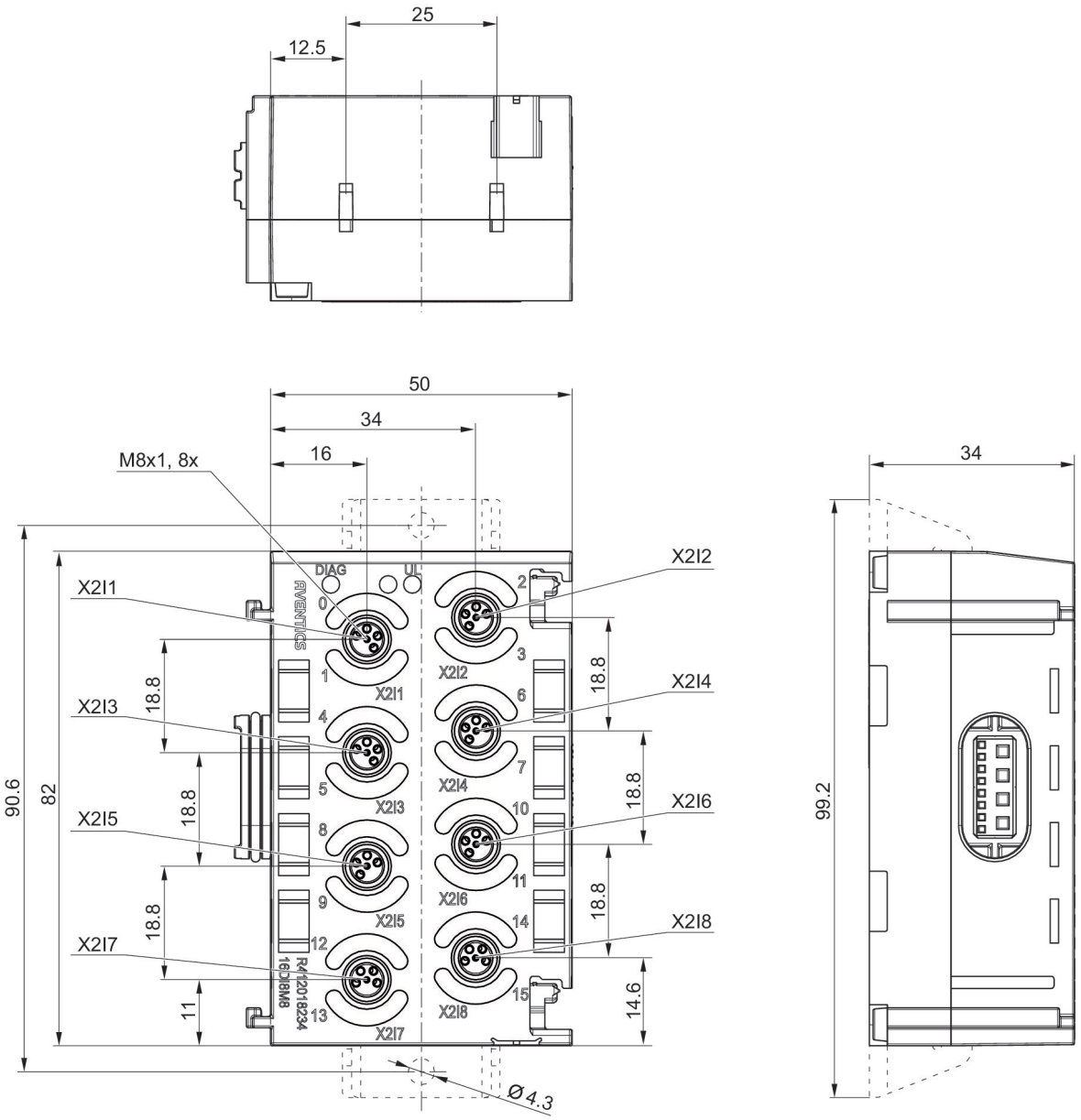

1) Retaining bracket (optional)
Pin assignment M8x1 (4-pin)

Pin assignments

X2I1-X2I8

4-pin

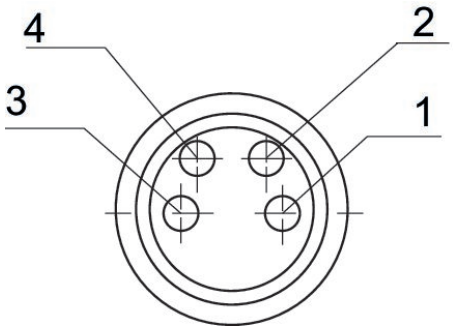

PNP

Pin	Input module
1	24 V DC sensor voltage
2	Input signal (most significant bit)
3	0 V DC sensor voltage
4	Input signal (lower order bit)

I/O modules, series AES

R412018235

General series information
Series AES

- The AVENTICS Series AES fieldbus connection can be integrated into all AVENTICS fieldbus-compatible valve systems or can also be configured as a stand-alone solution. AES connects your AVENTICS valve system to all relevant fieldbus protocols and offers the integration of I/O-modules and enables optimized decentralized wiring of sensors. The integration of the Digital Twin enables users to be IIoT ready and use the AES to solve their interoperability challenges.

Technical data

Industry
Industrial

Version
I/O modules

Type
8DI4M12

E/A capable
connection with I/O

I/O module version
digital inputs

Number of I/O connections
8 inputs

Power plug IN type
Internal

Signal connection E/A type
Socket

Signal connection E/A thread size
M12x1

Signal connection E/A number of poles
5-pin

Filter time
3 ms

Min. ambient temperature
-10 °C

Max. ambient temperature
60 °C

Operational voltage electronics
24 V DC

Electronics voltage tolerance
-25% / +25%

Max. current per channel
0.5 A

Power supply for actuators
8x0,5 A

Protection class
IP65

Total current of sensors max.
1 A

Diagnosis
Short circuit

Generic emission standard in accordance with norm
EN 61000-6-4

Generic immunity standard in accordance with norm
EN 61000-6-2

Weight
0.11 kg

Material

Housing material
Polyamide fiber-glass reinforced

Part No.
R412018235

Technical information

You will find assignment schemes for the product in the operating instructions, or contact the nearest AVENTICS sales office.

The total current of all outputs (including valves) must not exceed 4 A in the overall system.

Voltage and short-circuit monitoring per LED.

Delivery contents: incl. 2 spring clamp elements and seal

Dimensions

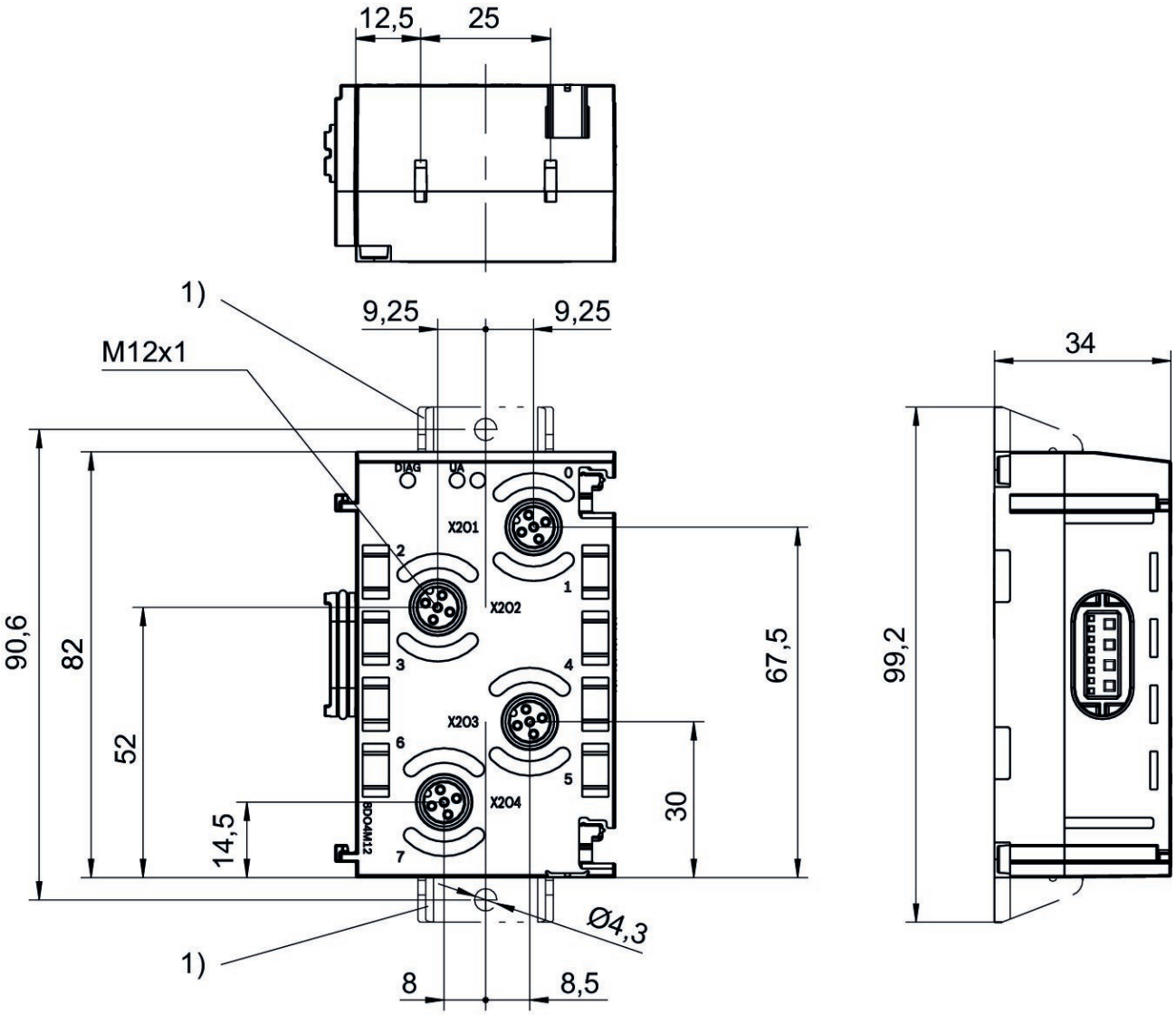

1) Retaining bracket (optional)

Pin assignments

PNP

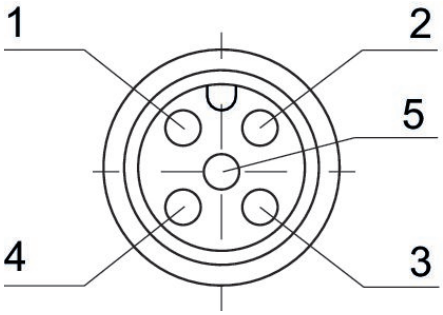

Pin	Input module	Output module
1	24 V DC	-
2	Input signal [X+1]	Output signal [X+1]
3	0 V DC	0 V DC
4	Input signal [X]	Output signal [X]
5	-	-

X = bit value

I/O modules, series AES

R412018250

General series information
Series AES

- The AVENTICS Series AES fieldbus connection can be integrated into all AVENTICS fieldbus-compatible valve systems or can also be configured as a stand-alone solution. AES connects your AVENTICS valve system to all relevant fieldbus protocols and offers the integration of I/O-modules and enables optimized decentralized wiring of sensors. The integration of the Digital Twin enables users to be IIoT ready and use the AES to solve their interoperability challenges.

Technical data

Industry
Industrial

Version
I/O modules

Type
8DO4M12

E/A capable
connection with I/O

I/O module version
digital outputs

Number of I/O connections
8 outputs

Power plug IN type
Internal

Signal connection E/A type
Socket

Signal connection E/A thread size
M12x1

Signal connection E/A number of poles
5-pin

Filter time
3 ms

Min. ambient temperature
-10 °C

Max. ambient temperature
60 °C

Operational voltage electronics
24 V DC

Electronics voltage tolerance
-25% / +25%

Max. current per channel
0.5 A

Power supply for actuators
8x0,5 A

Total current for actuators
4 A

Protection class
IP65

Total current of sensors max.
1 A

Logic/actuator voltage
Galvanically isolated

Diagnosis
Short circuit

Generic emission standard in accordance with norm
EN 61000-6-4

Generic immunity standard in accordance with norm
EN 61000-6-2

Weight
0.11 kg

Material

Housing material
Polyamide fiber-glass reinforced

Part No.
R412018250

Technical information

You will find assignment schemes for the product in the operating instructions, or contact the nearest AVENTICS sales office.

The total current of all outputs (including valves) must not exceed 4 A in the overall system.

Voltage and short-circuit monitoring per LED.

Delivery contents: incl. 2 spring clamp elements and seal

Dimensions

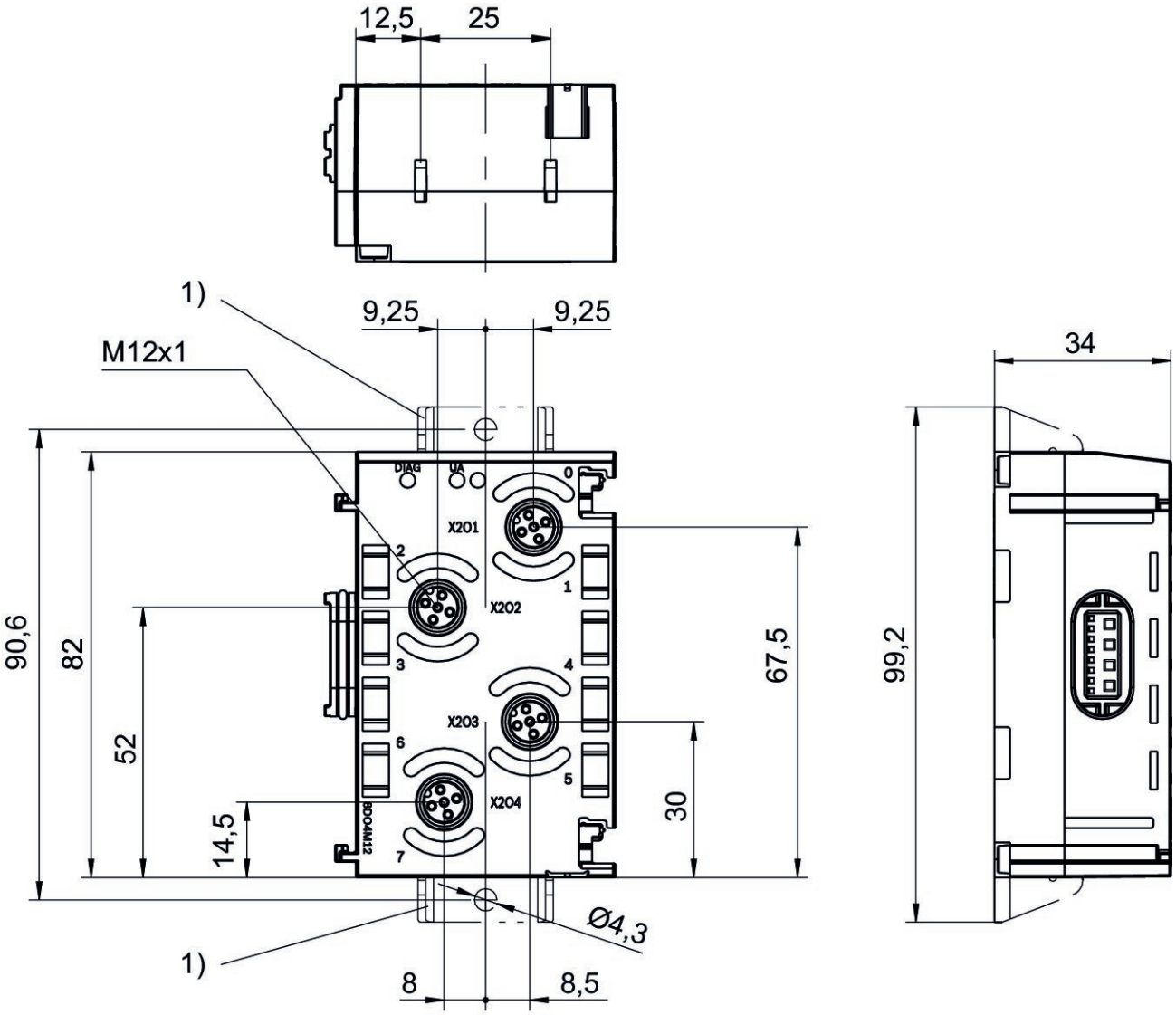

1) Retaining bracket (optional)

Pin assignments

PNP

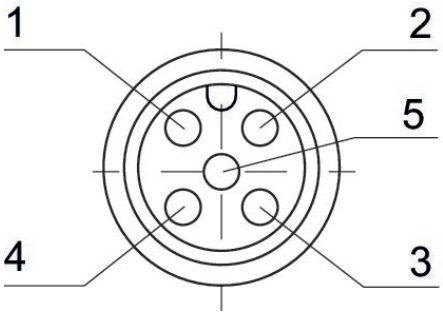

Pin	Input module	Output module
1	24 V DC	-
2	Input signal [X+1]	Output signal [X+1]
3	0 V DC	0 V DC
4	Input signal [X]	Output signal [X]
5	-	-

X = bit value

I/O modules, series AES

R412018270

General series information
Series AES

- The AVENTICS Series AES fieldbus connection can be integrated into all AVENTICS fieldbus-compatible valve systems or can also be configured as a stand-alone solution. AES connects your AVENTICS valve system to all relevant fieldbus protocols and offers the integration of I/O-modules and enables optimized decentralized wiring of sensors. The integration of the Digital Twin enables users to be IIoT ready and use the AES to solve their interoperability challenges.

Technical data

Industry
Industrial

Version
I/O modules

Type
8DIDO4M12

Note
Combination module

E/A capable
connection with I/O

I/O module version
digital inputs/outputs

Number of I/O connections
8 inputs / 8 outputs

Power plug IN type
Internal

Signal connection E/A type
Socket

Signal connection E/A thread size
M12x1

Signal connection E/A number of poles
5-pin

Min. ambient temperature
-10 °C

Max. ambient temperature
60 °C

Operational voltage electronics
24 V DC

Electronics voltage tolerance
-25% / +25%

Max. current per channel
0.5 A

Power supply for actuators
8x0,5 A

Total current for actuators
4 A

Protection class
IP65

Total current of sensors max.
1 A

Logic/actuator voltage
Galvanically isolated

Diagnosis
Short circuit

Generic emission standard in accordance with norm
EN 61000-6-4

Generic immunity standard in accordance with norm
EN 61000-6-2

Weight
0.11 kg

Material

Housing material
Polyamide fiber-glass reinforced

Part No.
R412018270

Technical information

You will find assignment schemes for the product in the operating instructions, or contact the nearest AVENTICS sales office.

The total current of all outputs (including valves) must not exceed 4 A in the overall system.

Voltage and short-circuit monitoring per LED.

Delivery contents: incl. 2 spring clamp elements and seal

Function specification for fieldbus configuration.

Dimensions

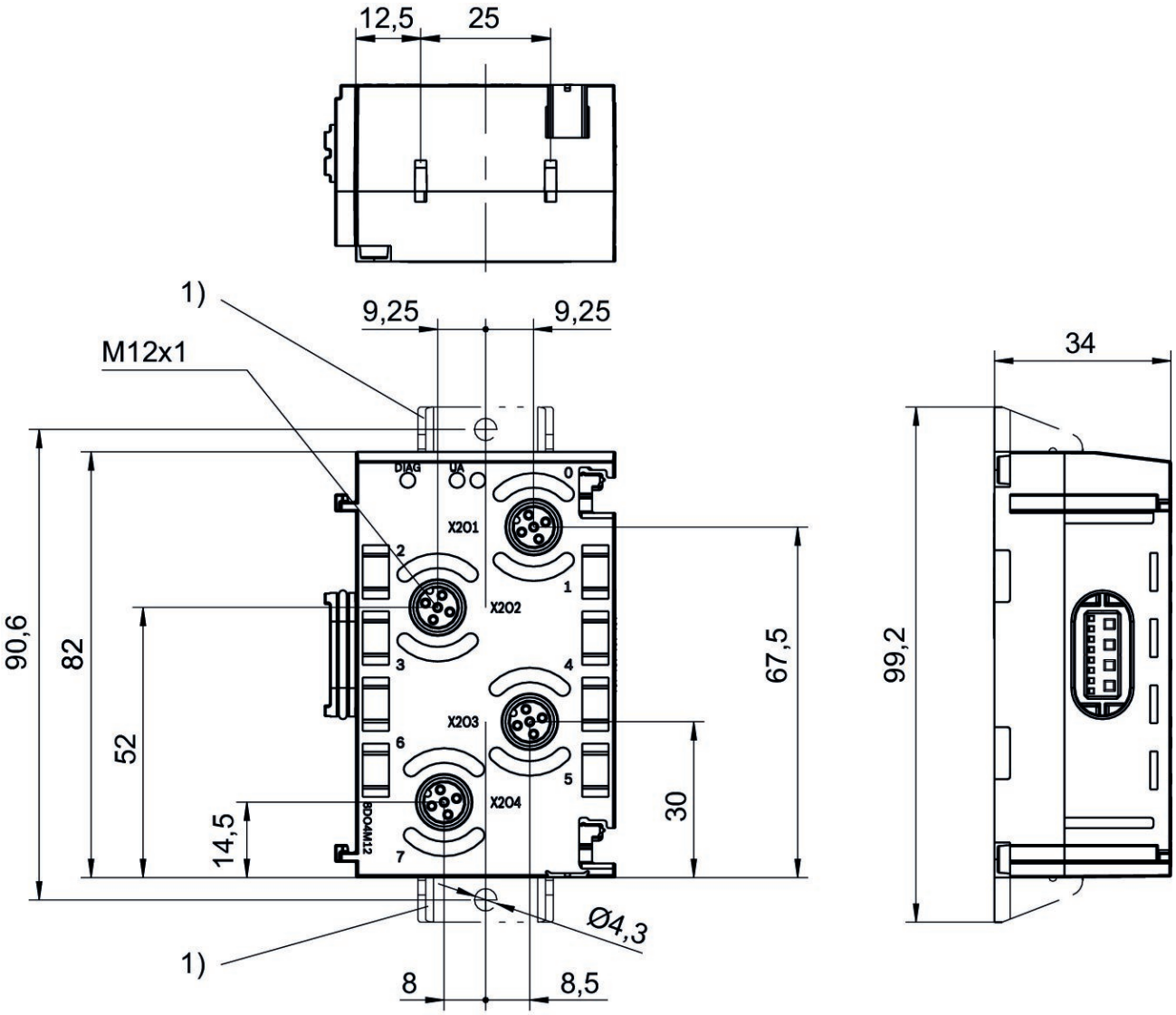

1) Retaining bracket (optional)

Pin assignments

PNP

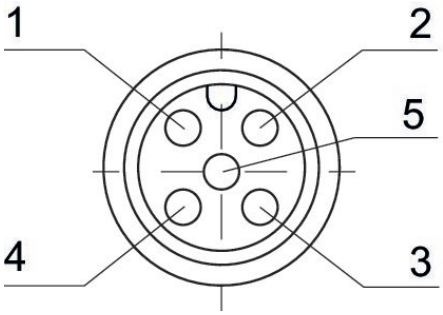

Pin	Input module	Output module
1	24 V DC	-
2	Input signal [X+1]	Output signal [X+1]
3	0 V DC	0 V DC
4	Input signal [X]	Output signal [X]
5	-	-

X = bit value

I/O modules, series AES

R412018243

General series information
Series AES

- The AVENTICS Series AES fieldbus connection can be integrated into all AVENTICS fieldbus-compatible valve systems or can also be configured as a stand-alone solution. AES connects your AVENTICS valve system to all relevant fieldbus protocols and offers the integration of I/O-modules and enables optimized decentralized wiring of sensors. The integration of the Digital Twin enables users to be IIoT ready and use the AES to solve their interoperability challenges.

Technical data

Industry
Industrial

Version
I/O modules

Type
16DI4M12

E/A capable
connection with I/O

I/O module version
digital inputs

Number of I/O connections
16 inputs

Power plug IN type
Internal

Signal connection E/A type
Socket

Signal connection E/A thread size
M12x1

Signal connection E/A number of poles
8-pin

Filter time
3 ms

Min. ambient temperature
-10 °C

Max. ambient temperature
60 °C

Operational voltage electronics
24 V DC

Electronics voltage tolerance
-10% / +10%

Max. current per channel
0.5 A

Protection class
IP65

Total current of sensors max.
1 A

Diagnosis
Short circuit

Generic emission standard in accordance with norm
EN 61000-6-4

Generic immunity standard in accordance with norm
EN 61000-6-2

Weight
0.11 kg

Material

Housing material
Polyamide fiber-glass reinforced

Part No.
R412018243

Technical information

You will find assignment schemes for the product in the operating instructions, or contact the nearest AVENTICS sales office.

The total current of all outputs (including valves) must not exceed 4 A in the overall system.

Voltage and short-circuit monitoring per LED.

Delivery contents: incl. 2 spring clamp elements and seal

Dimensions

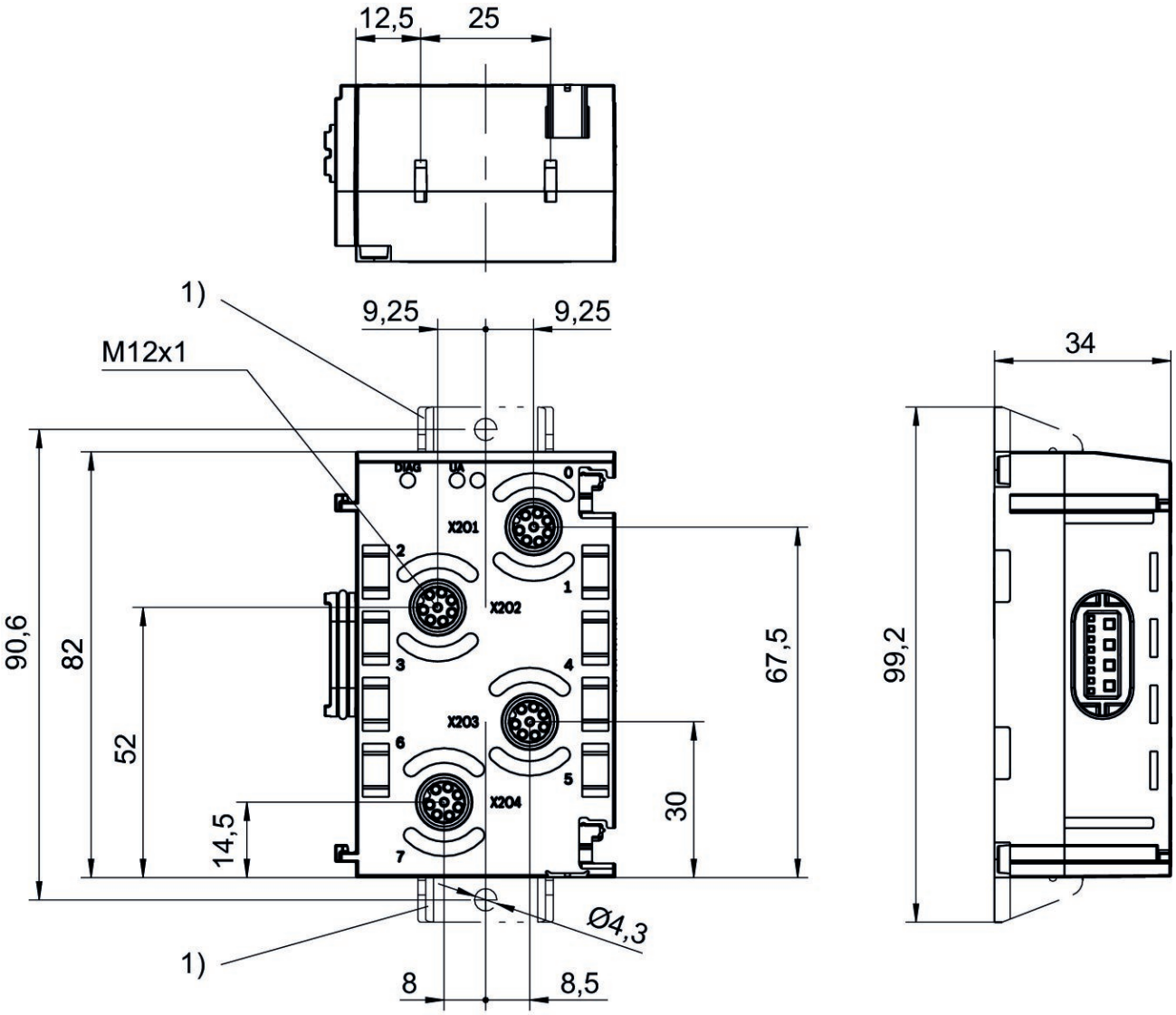

1) Retaining bracket (optional)

Pin assignments

PNP

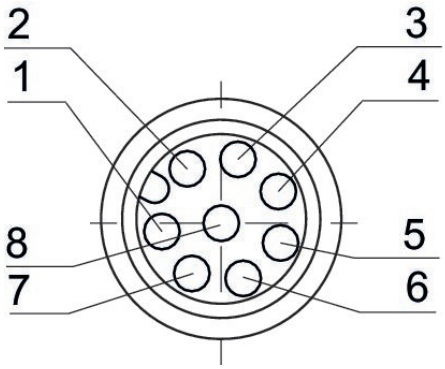

Pin	Input module	Output module
1	Input signal [X]	Output signal 24 V DC [X]
2	Input signal [X+1]	Output signal 24 V DC [X+1]
3	Input signal [X+2]	Output signal 24 V DC [X+2]
4	Input signal [X+3]	Output signal 24 V DC [X+3]
5	24 V DC	-
6	-	-
7	0 V DC	0 V DC
8	-	-
X = bit value		

X = bit value

I/O modules, series AES

R412018263

General series information
Series AES

- The AVENTICS Series AES fieldbus connection can be integrated into all AVENTICS fieldbus-compatible valve systems or can also be configured as a stand-alone solution. AES connects your AVENTICS valve system to all relevant fieldbus protocols and offers the integration of I/O-modules and enables optimized decentralized wiring of sensors. The integration of the Digital Twin enables users to be IIoT ready and use the AES to solve their interoperability challenges.

Technical data

Industry
Industrial

Version
I/O modules

Type
16DO4M12

E/A capable
connection with I/O

I/O module version
digital outputs

Number of I/O connections
16 outputs

Power plug IN type
Internal

Signal connection E/A type
Socket

Signal connection E/A thread size
M12x1

Signal connection E/A number of poles
8-pin

Filter time
3 ms

Min. ambient temperature
-10 °C

Max. ambient temperature
60 °C

Operational voltage electronics
24 V DC

Electronics voltage tolerance
-10% / +10%

Max. current per channel
0.5 A

Total current for actuators
4 A

Protection class
IP65

Total current of sensors max.
1 A

Logic/actuator voltage
Galvanically isolated

Diagnosis
Short circuit

Generic emission standard in accordance with norm
EN 61000-6-4

Generic immunity standard in accordance with norm
EN 61000-6-2

Weight
0.11 kg

Material

Housing material
Polyamide fiber-glass reinforced

Part No.
R412018263

Technical information

You will find assignment schemes for the product in the operating instructions, or contact the nearest AVENTICS sales office.

The total current of all outputs (including valves) must not exceed 4 A in the overall system.

Voltage and short-circuit monitoring per LED.

Delivery contents: incl. 2 spring clamp elements and seal

Dimensions

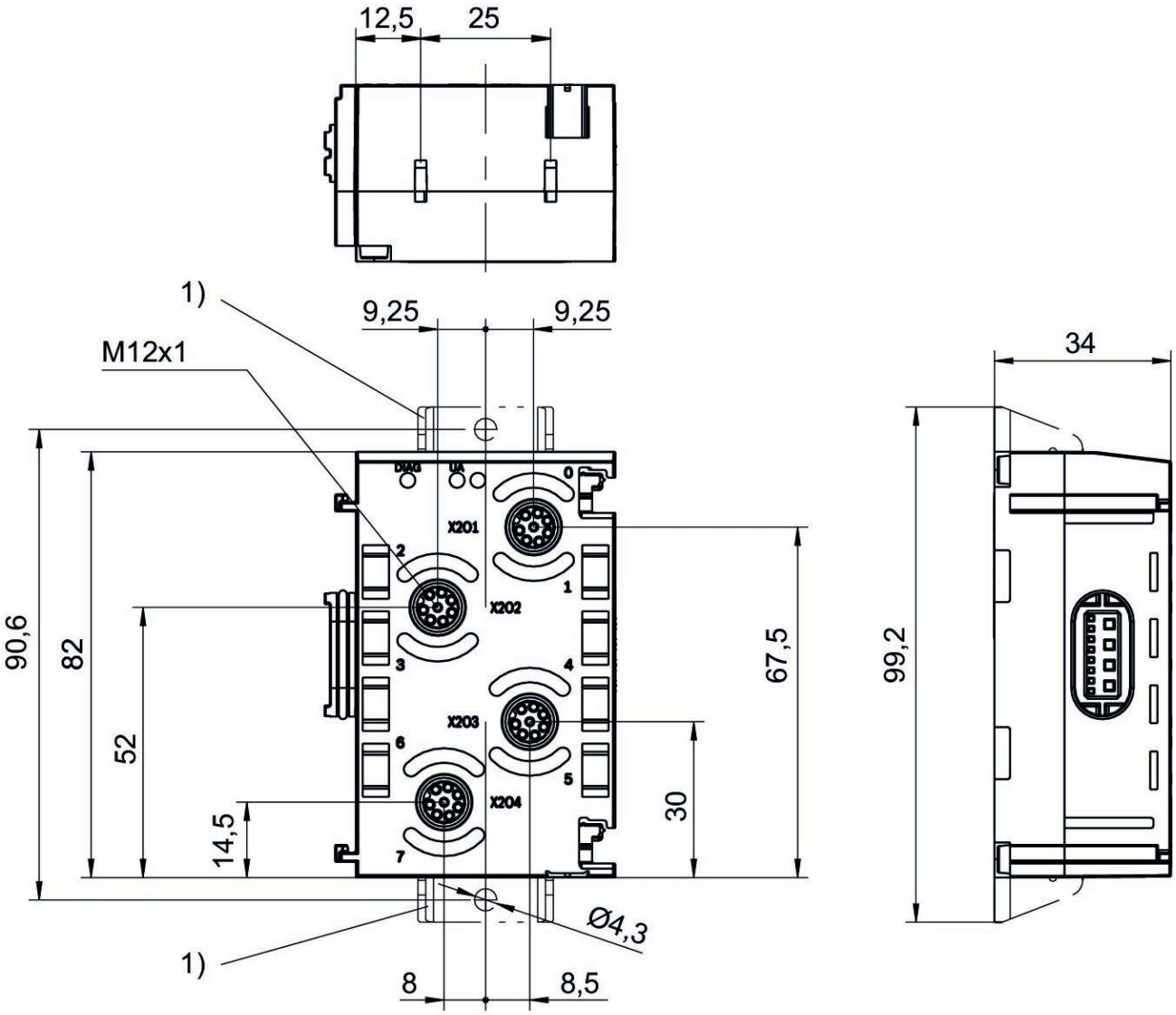

1) Retaining bracket (optional)

Pin assignments

PNP

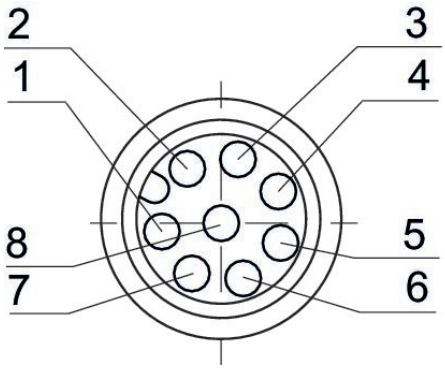

Pin	Input module	Output module
1	Input signal [X]	Output signal 24 V DC [X]
2	Input signal [X+1]	Output signal 24 V DC [X+1]
3	Input signal [X+2]	Output signal 24 V DC [X+2]
4	Input signal [X+3]	Output signal 24 V DC [X+3]
5	24 V DC	-
6	-	-
7	0 V DC	0 V DC
8	-	-
X = bit value		

X = bit value

I/O modules, series AES

R412018254

General series information
Series AES

- The AVENTICS Series AES fieldbus connection can be integrated into all AVENTICS fieldbus-compatible valve systems or can also be configured as a stand-alone solution. AES connects your AVENTICS valve system to all relevant fieldbus protocols and offers the integration of I/O-modules and enables optimized decentralized wiring of sensors. The integration of the Digital Twin enables users to be IIoT ready and use the AES to solve their interoperability challenges.

Technical data

Industry
Industrial

Version
I/O modules

Type
24DO1DSUB25

E/A capable
connection with I/O

I/O module version
digital outputs

Number of I/O connections
24 outputs

Power plug IN type
Internal

Signal connection E/A type
Socket

Signal connection E/A thread size
D-Sub

Signal connection E/A number of poles
25-pin

Min. ambient temperature
-10 °C

Max. ambient temperature
60 °C

Operational voltage electronics
24 V DC

Max. current per channel
0.5 A

Total current for actuators
4 A

Protection class
IP65

Logic/actuator voltage
Galvanically isolated

Diagnosis
Short circuit
Undervoltage

Generic emission standard in accordance with norm
EN 61000-6-4

Generic immunity standard in accordance with norm
EN 61000-6-2

Weight
0.115 kg

Material

Housing material	Part No.
Polyamide fiber-glass reinforced	R412018254

Technical information

You will find assignment schemes for the product in the operating instructions, or contact the nearest AVENTICS sales office.

Voltage and short-circuit monitoring per LED.

Delivery contents: incl. 2 spring clamp elements and seal

Dimensions

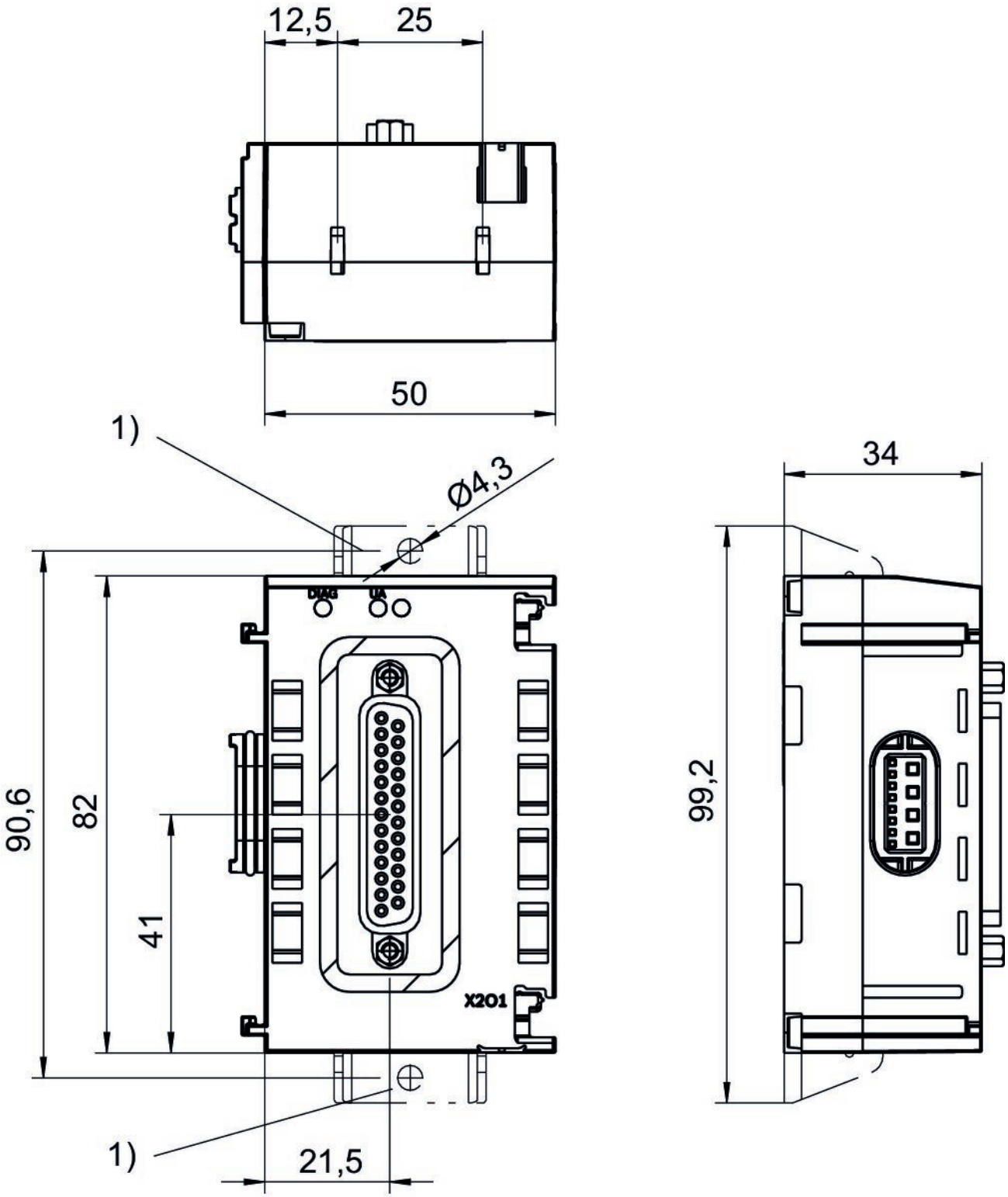

1) Retaining bracket (optional)

PIN assignment and cable colors

cable identification as per DIN 47100

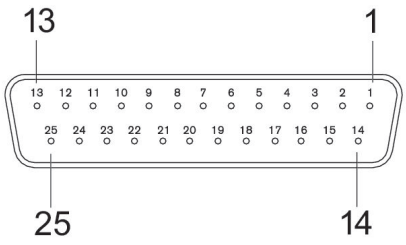

Socket

Pin	Output module
1	[X]
2	[X+0.1]
3	[X+0.2]
4	[X+0.3]
5	[X+0.4]
6	[X+0.5]
7	[X+0.6]
8	[X+0.7]
9	[X+1]
10	[X+1.1]
11	[X+1.2]
12	[X+1.3]
13	[X+1.4]
14	[X+1.5]
15	[X+1.6]
16	[X+1.7]
17	[X+2.0]
18	[X+2.1]
19	[X+2.2]
20	[X+2.3]
21	[X+2.4]
22	[X+2.5]
23	[X+2.6]
24	[X+2.7]
25	0 V DC

X = bit value

I/O modules, series AES

R412018242

General series information
Series AES

- The AVENTICS Series AES fieldbus connection can be integrated into all AVENTICS fieldbus-compatible valve systems or can also be configured as a stand-alone solution. AES connects your AVENTICS valve system to all relevant fieldbus protocols and offers the integration of I/O-modules and enables optimized decentralized wiring of sensors. The integration of the Digital Twin enables users to be IIoT ready and use the AES to solve their interoperability challenges.

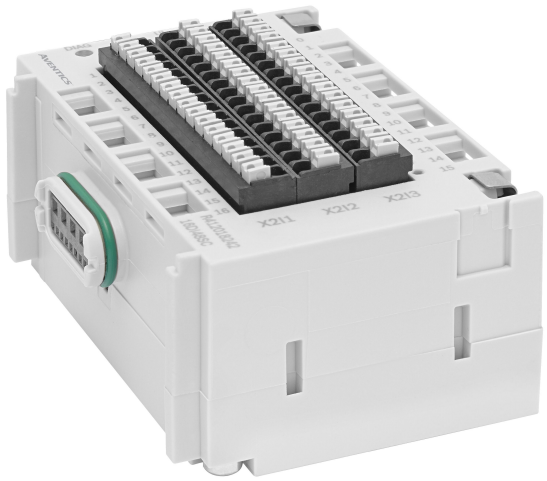

Technical data

Industry
Industrial

Version
I/O modules

Type
16DI48SC

E/A capable
connection with I/O

I/O module version
digital inputs

Number of I/O connections
16 inputs

Power plug IN type
Internal

Signal connection E/A type
Spring clamp connections

Min. ambient temperature
-10 °C

Max. ambient temperature
60 °C

Operational voltage electronics
24 V DC

Electronics voltage tolerance
-25% / +25%

Max. current per channel
0.5 A

Protection class
IP20

Total current of sensors max.
1 A

Diagnosis
Short circuit

Generic emission standard in accordance with norm
EN 61000-6-4

Generic immunity standard in accordance with norm
EN 61000-6-2

Weight
0.115 kg

Material

Housing material	Part No.
Polyamide fiber-glass reinforced	R412018242

Technical information

You will find assignment schemes for the product in the operating instructions, or contact the nearest AVENTICS sales office.

Voltage and short-circuit monitoring per LED.

The clamp area for stranded wires is between 0.2 and 1.5 mm2.

Delivery contents: incl. 2 spring clamp elements and seal

Dimensions

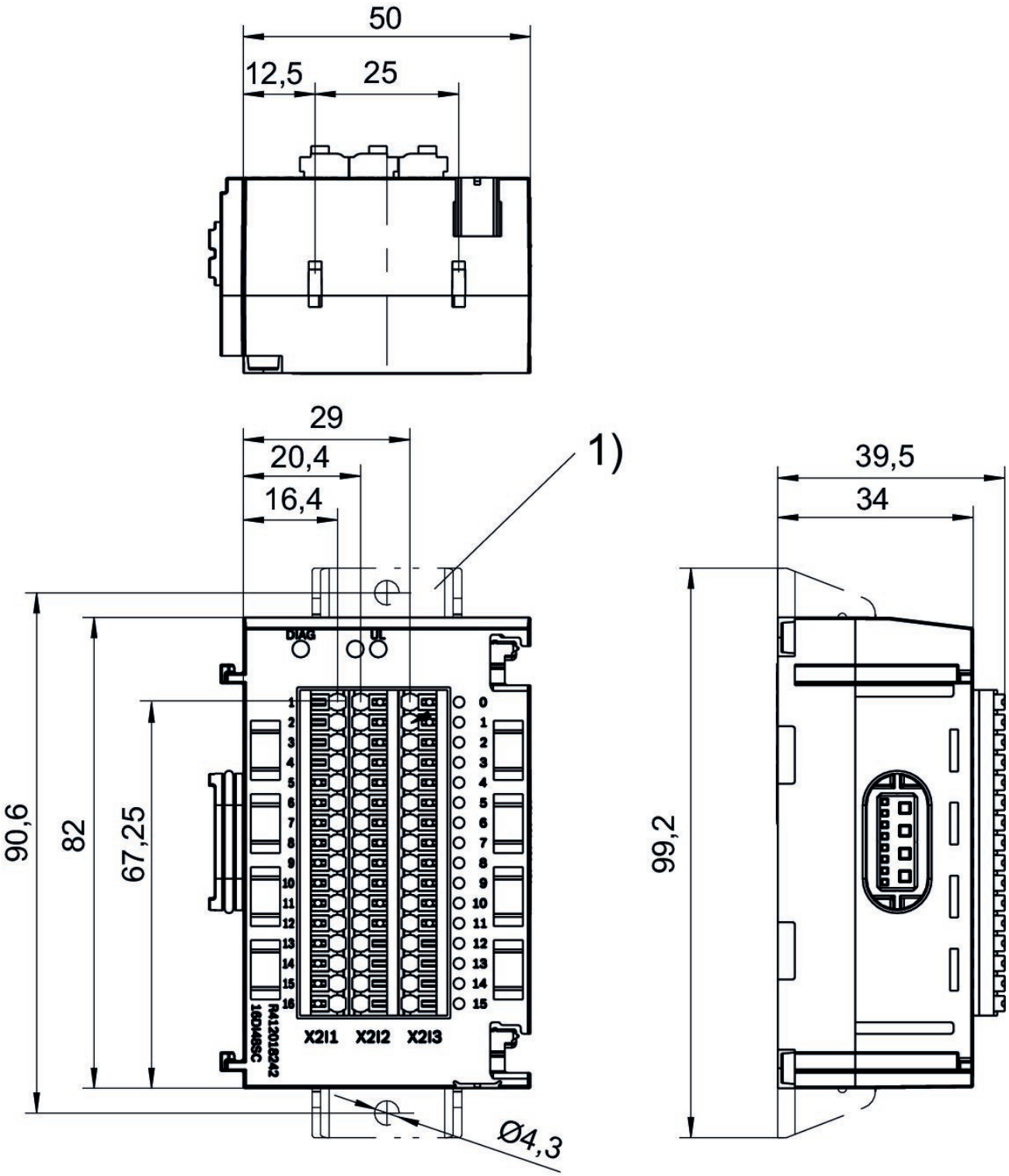

1) Retaining bracket (optional)

Port	Contact	Function Input signal
X2I1	1	24 V DC bit 0.0
	2	24 V DC bit 0.1
	3	24 V DC bit 0.2
	4	24 V DC bit 0.3
	5	24 V DC bit 0.4
	6	24 V DC bit 0.5
	7	24 V DC bit 0.6
	8	24 V DC bit 0.7
	9	24 V DC bit 1.0
	10	24 V DC bit 1.1
	11	24 V DC bit 1.2
	12	24 V DC bit 1.3
	13	24 V DC bit 1.4
	14	24 V DC bit 1.5
	15	24 V DC bit 1.6
	16	24 V DC bit 1.7
X2I2	1-16	24 V DC
X2I3	1-16	0 V DC

Power module Series AES

R412018267

General series information
Series AES

- The AVENTICS Series AES fieldbus connection can be integrated into all AVENTICS fieldbus-compatible valve systems or can also be configured as a stand-alone solution. AES connects your AVENTICS valve system to all relevant fieldbus protocols and offers the integration of I/O-modules and enables optimized decentralized wiring of sensors. The integration of the Digital Twin enables users to be IIoT ready and use the AES to solve their interoperability challenges.

Technical data

Industry
Industrial

Version
Power module

E/A capable
connection with I/O

Power plug IN type
Plug

Power plug IN size
M12x1

Power plug IN number of pole
4-pin

Power plug OUT type
Socket

Power plug OUT size
M12x1

Power plug OUT number of pole
4-pin

Power supply direction UA
left

Min. ambient temperature
-10 °C

Max. ambient temperature
60 °C

Operational voltage electronics
24 V DC

Electronics voltage tolerance
-20% / +20%

Operating voltage, actuators
24 V DC

Actuator voltage tolerance
-10% / +10%

Total current for actuators
4 A

Protection class
IP65

Total current of sensors max.
4 A

Generic emission standard in accordance with norm
EN 61000-6-4

Generic immunity standard in accordance with norm
EN 61000-6-2

Weight
0.15 kg

Material

Housing material
Polyamide fiber-glass reinforced

Part No.
R412018267

Technical information

You will find assignment schemes for the product in the operating instructions, or contact the nearest AVENTICS sales office.

UL: Logic voltage (power supply for electronic components and sensors)

UA: Actuator voltage (power supply for valves and outputs)

The supply voltage is galvanically isolated from the right-hand module.

Dimensions

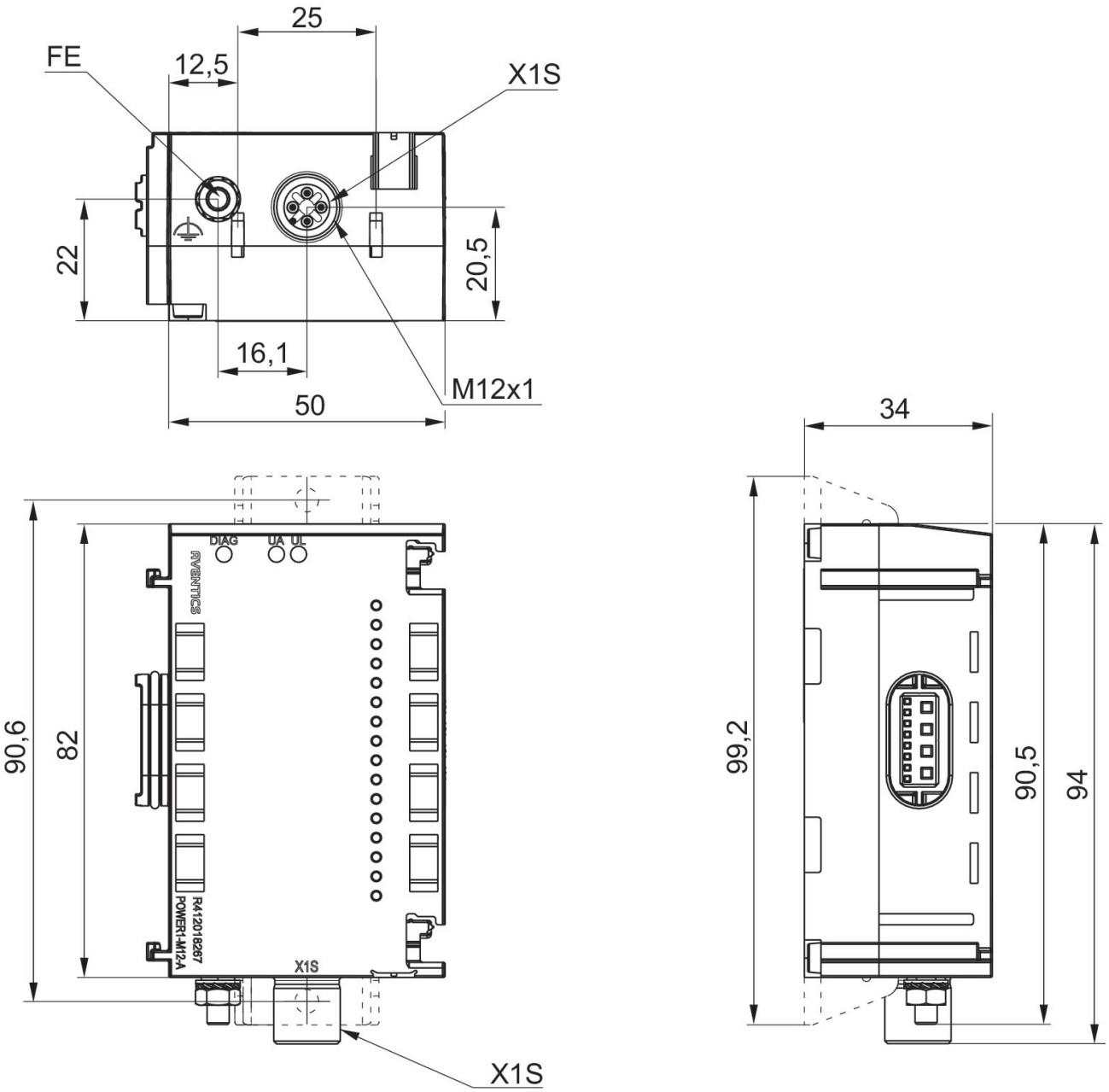

Port 1, X1S

Pin assignments

PNP

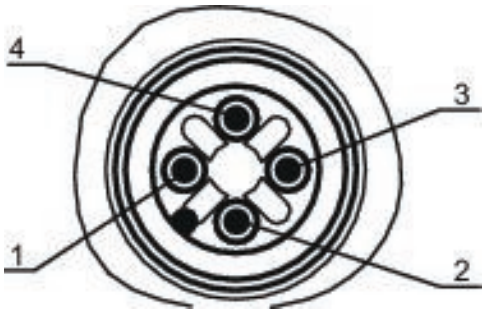

Pin	R412018267 (UA)	R412018267 (UL)
1	-	24 V DC power supply (UL) input
2	24 V DC power supply (UA) input	-
3	-	0 V DC (UL)
4	0 V DC (UA)	-

Power module Series AES

R412018268

General series information
Series AES

- The AVENTICS Series AES fieldbus connection can be integrated into all AVENTICS fieldbus-compatible valve systems or can also be configured as a stand-alone solution. AES connects your AVENTICS valve system to all relevant fieldbus protocols and offers the integration of I/O-modules and enables optimized decentralized wiring of sensors. The integration of the Digital Twin enables users to be IIoT ready and use the AES to solve their interoperability challenges.

Technical data

Industry
Industrial

Version
Power module

E/A capable
connection with I/O

Power plug IN type
Plug

Power plug IN size
M12x1

Power plug IN number of pole
4-pin

Power plug OUT type
Socket

Power plug OUT size
M12x1

Power plug OUT number of pole
4-pin

Power supply direction UL
left

Min. ambient temperature
-10 °C

Max. ambient temperature
60 °C

Operational voltage electronics
24 V DC

Electronics voltage tolerance
-20% / +20%

Operating voltage, actuators
24 V DC

Actuator voltage tolerance
-10% / +10%

Total current for actuators
4 A

Protection class
IP65

Total current of sensors max.
4 A

Generic emission standard in accordance with norm
EN 61000-6-4

Generic immunity standard in accordance with norm
EN 61000-6-2

Weight
0.15 kg

Material

Housing material
Polyamide fiber-glass reinforced

Part No.
R412018268

Technical information

You will find assignment schemes for the product in the operating instructions, or contact the nearest AVENTICS sales office.

UL: Logic voltage (power supply for electronic components and sensors)

UA: Actuator voltage (power supply for valves and outputs)

The supply voltage is galvanically isolated from the right-hand module.

Dimensions

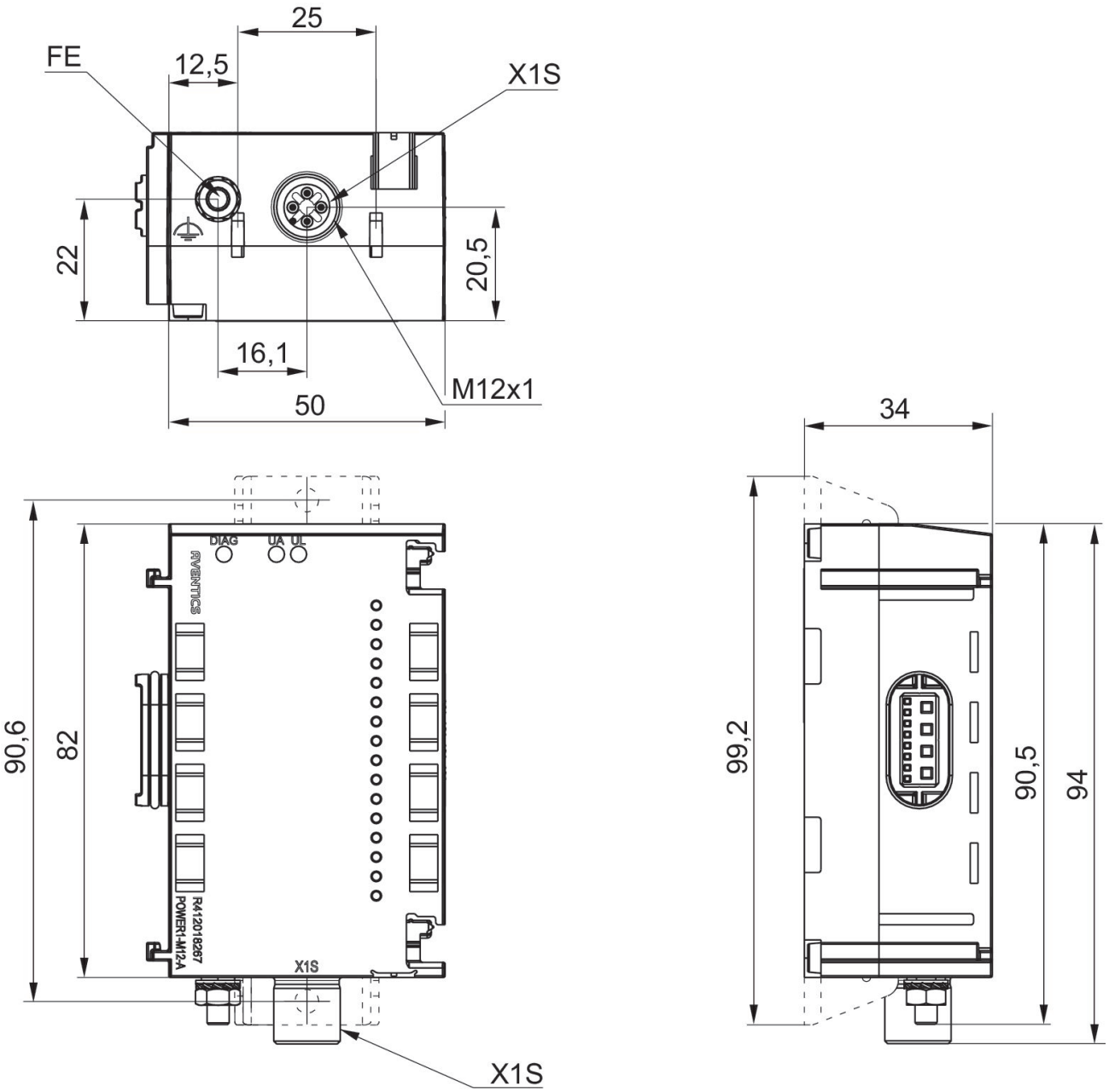

Port 1, X1S

Pin assignments

PNP

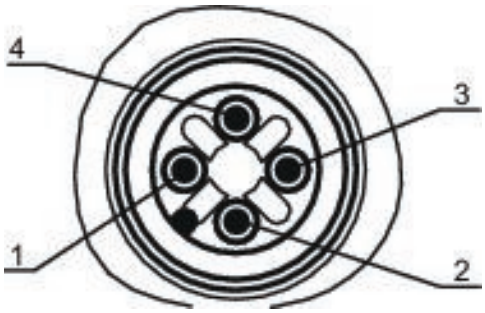

Pin	R412018267 (UA)	R412018267 (UL)
1	-	24 V DC power supply (UL) input
2	24 V DC power supply (UA) input	-
3	-	0 V DC (UL)
4	0 V DC (UA)	-

I/O modules, series AES

R412018277

General series information
Series AES

- The AVENTICS Series AES fieldbus connection can be integrated into all AVENTICS fieldbus-compatible valve systems or can also be configured as a stand-alone solution. AES connects your AVENTICS valve system to all relevant fieldbus protocols and offers the integration of I/O-modules and enables optimized decentralized wiring of sensors. The integration of the Digital Twin enables users to be IIoT ready and use the AES to solve their interoperability challenges.

Technical data

Industry
Industrial

Version
I/O modules

Type
2AI2M12-E

E/A capable
connection with I/O

I/O module version
analog inputs/outputs

Number of I/O connections
2 inputs

Power plug IN type
Internal

Signal connection E/A type
Socket

Signal connection E/A thread size
M12x1

Signal connection E/A number of poles
5-pin

Signal connection E/A coding
A-coded

Analog inputs
0 - 10 V / ± 10 V
2 - 10 V / ± 10 V
0 - 20 mA / ± 20 mA
4 - 20 mA / ± 20 mA

Min. ambient temperature
-10 °C

Max. ambient temperature
60 °C

Operational voltage electronics
24 V DC

Max. current per channel
0.5 A

Protection class
IP65

Diagnosis
Short circuit
Undervoltage

Number of inputs
2

Generic emission standard in accordance with norm
EN 61000-6-4

Generic immunity standard in accordance with norm
EN 61000-6-2

Weight
0.11 kg

Material

Housing material
Polyamide fiber-glass reinforced

Part No.
R412018277

Technical information

You will find assignment schemes for the product in the operating instructions, or contact the nearest AVENTICS sales office.

The total current of all outputs (including valves) must not exceed 4 A in the overall system.

Voltage and short-circuit monitoring per LED.

The input channels have an input resistance of 120 ohms in the current range and 100 kiloohms in the voltage range.

The output channels can drive a maximum ohmic load of 450 ohms in the current range. The minimum resistance in the voltage range is 1 kiloohm.

Delivery contents: incl. 2 spring clamp elements and seal

freely selectable signals, configurable

Dimensions

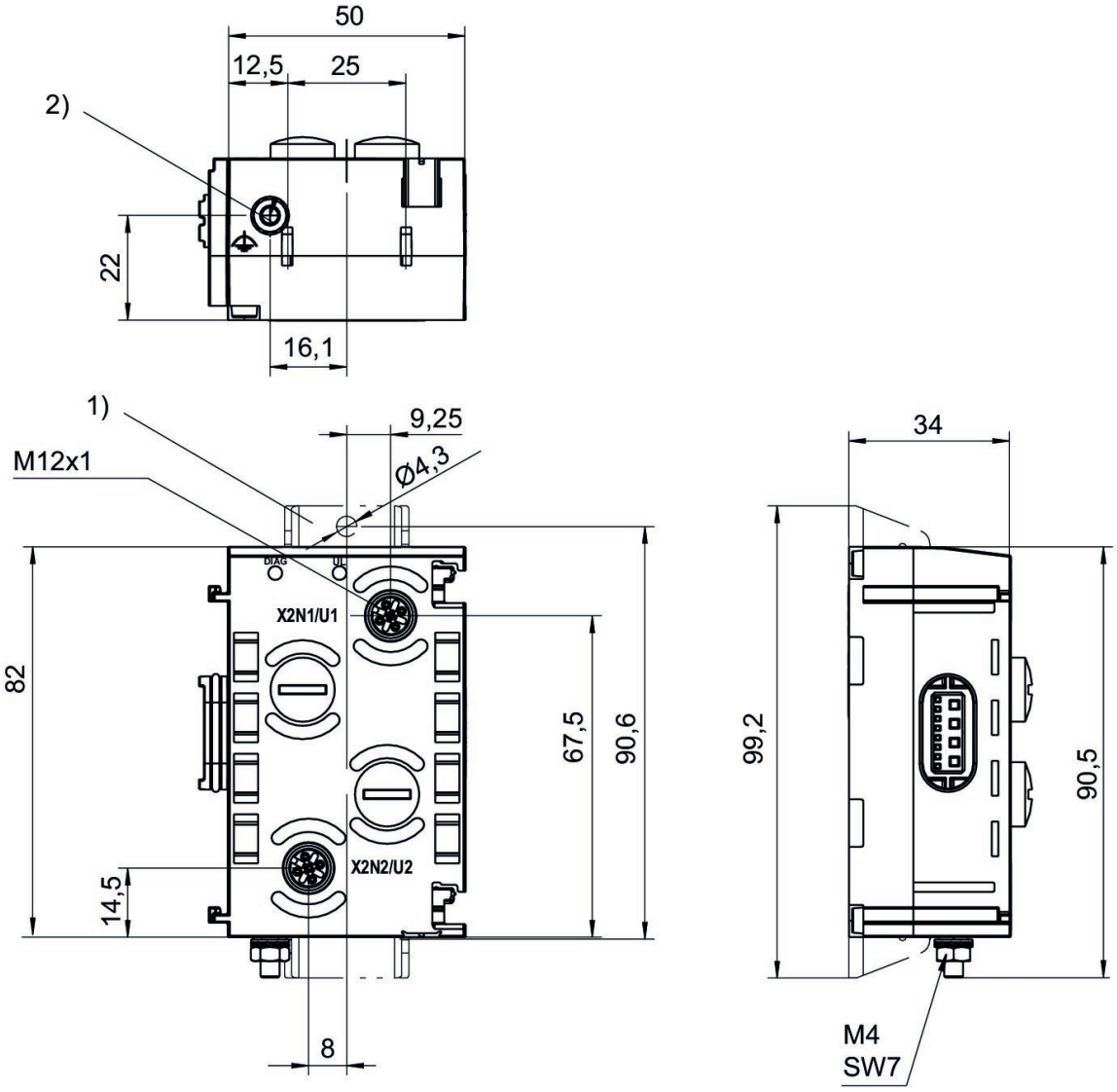

1) Retaining bracket (optional)
2) Ground

Pin assignments

Socket (female)

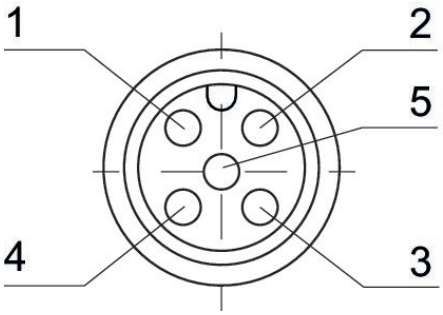

Pin	Socket (female) X2N1 - X2N2 2AI2M12-E	Socket (female) X2U1 - X2U4 4AI4M12-E	Socket (female) X2U1 - X2U2 2AO2M12-E
1	24 V DC	24 V DC	not assigned
2	Input signal (differential input, positive signal)	Input signal (differential input, positive signal)	Output signal
3	0 V DC	0 V DC	0 V DC
4	Input signal (differential input, negative signal, or connected externally to 0 V (pin 3))	Input signal (0 V, connected to pin 3 internally)	not assigned
5	Shield, connected internally with ground screw 2)	Shield, connected internally with ground screw 2)	Shield, connected internally with ground screw 2)

I/O modules, series AES

R412018278

General series information
Series AES

- The AVENTICS Series AES fieldbus connection can be integrated into all AVENTICS fieldbus-compatible valve systems or can also be configured as a stand-alone solution. AES connects your AVENTICS valve system to all relevant fieldbus protocols and offers the integration of I/O-modules and enables optimized decentralized wiring of sensors. The integration of the Digital Twin enables users to be IIoT ready and use the AES to solve their interoperability challenges.

Technical data

Industry
Industrial

Version
I/O modules

Type
4AI4M12-E

E/A capable
connection with I/O

I/O module version
analog inputs/outputs

Number of I/O connections
4 inputs

Power plug IN type
Internal

Signal connection E/A type
Socket

Signal connection E/A thread size
M12x1

Signal connection E/A number of poles
5-pin

Signal connection E/A coding
A-coded

Analog inputs
0 ... 10 V
2 - 10 V
0 ... 20 mA
4 ... 20 mA

Min. ambient temperature
-10 °C

Max. ambient temperature
60 °C

Operational voltage electronics
24 V DC

Max. current per channel
0.5 A

Protection class
IP65

Diagnosis
Short circuit
Undervoltage

Number of inputs
4

Generic emission standard in accordance with norm
EN 61000-6-4

Generic immunity standard in accordance with norm
EN 61000-6-2

Weight
0.11 kg

Material

Housing material
Polyamide fiber-glass reinforced

Part No.
R412018278

Technical information

You will find assignment schemes for the product in the operating instructions, or contact the nearest AVENTICS sales office.

The total current of all outputs (including valves) must not exceed 4 A in the overall system.

Voltage and short-circuit monitoring per LED.

The input channels have an input resistance of 120 ohms in the current range and 100 kiloohms in the voltage range.

The output channels can drive a maximum ohmic load of 450 ohms in the current range. The minimum resistance in the voltage range is 1 kiloohm.

The input circuit uses an 8-bit conversion.

Dimensions

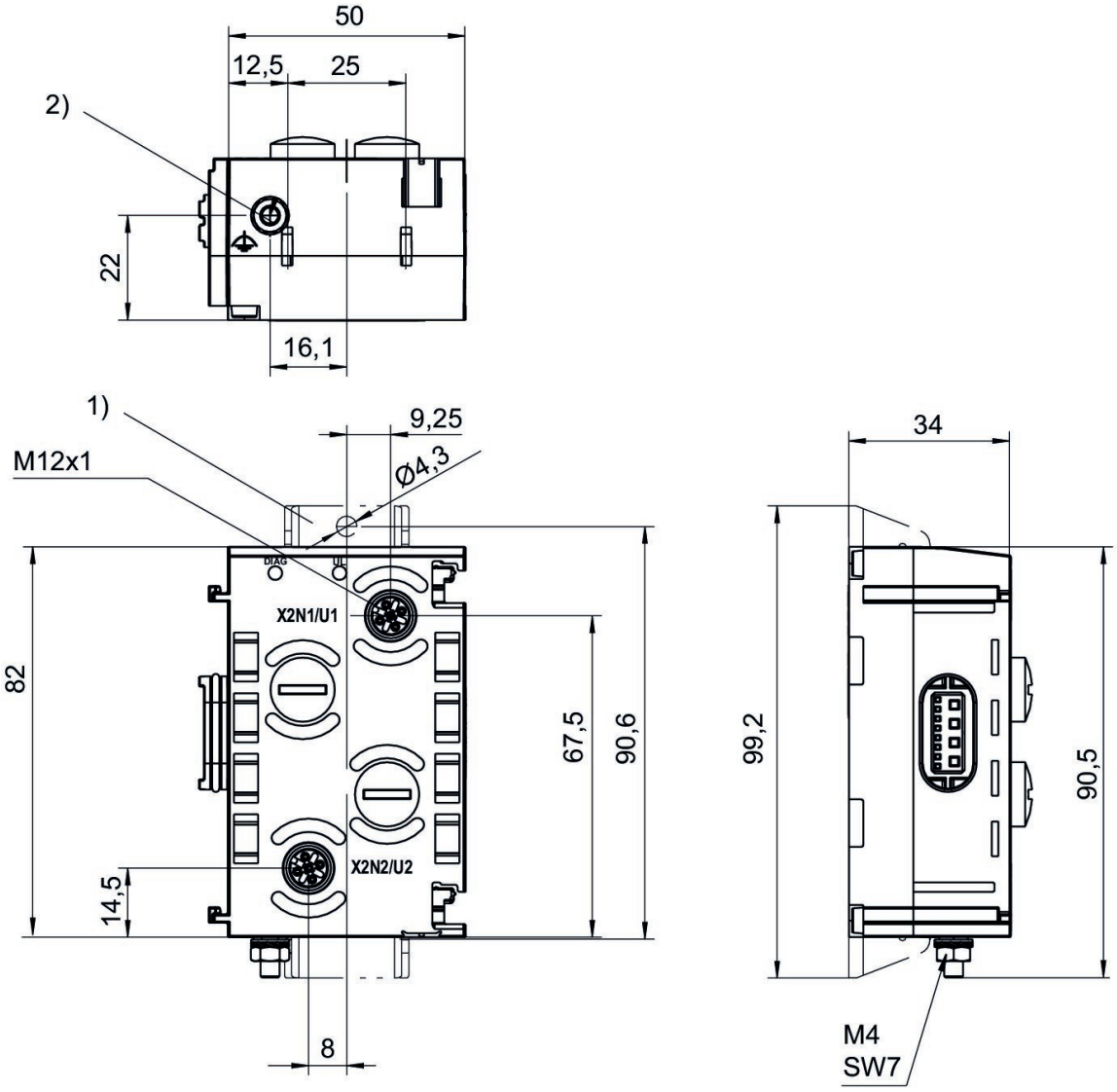

1) Retaining bracket (optional)
2) Ground

Pin assignments

Socket (female)

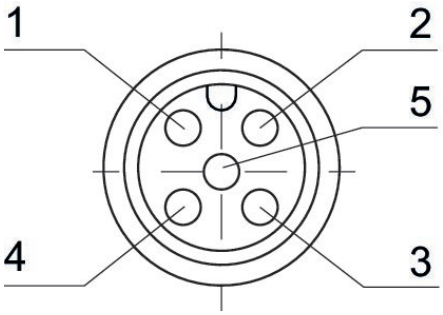

Pin	Socket (female) X2N1 - X2N2 2AI2M12-E	Socket (female) X2U1 - X2U4 4AI4M12-E	Socket (female) X2U1 - X2U2 2AO2M12-E
1	24 V DC	24 V DC	not assigned
2	Input signal (differential input, positive signal)	Input signal (differential input, positive signal)	Output signal
3	0 V DC	0 V DC	0 V DC
4	Input signal (differential input, negative signal, or connected externally to 0 V (pin 3))	Input signal (0 V, connected to pin 3 internally)	not assigned
5	Shield, connected internally with ground screw 2)	Shield, connected internally with ground screw 2)	Shield, connected internally with ground screw 2)

I/O modules, series AES

R412018281

General series information
Series AES

- The AVENTICS Series AES fieldbus connection can be integrated into all AVENTICS fieldbus-compatible valve systems or can also be configured as a stand-alone solution. AES connects your AVENTICS valve system to all relevant fieldbus protocols and offers the integration of I/O-modules and enables optimized decentralized wiring of sensors. The integration of the Digital Twin enables users to be IIoT ready and use the AES to solve their interoperability challenges.

Technical data

Industry
Industrial

Version
I/O modules

Type
2AO2M12-E

E/A capable
connection with I/O

I/O module version
analog inputs/outputs

Number of I/O connections
2 outputs

Power plug IN type
Internal

Signal connection E/A type
Socket

Signal connection E/A thread size
M12x1

Signal connection E/A number of poles
5-pin

Signal connection E/A coding
A-coded

Analog outputs
0 - 10 V / ± 10 V
0 ... 20 mA
4 ... 20 mA

Min. ambient temperature
-10 °C

Max. ambient temperature
60 °C

Operational voltage electronics
24 V DC

Max. current per channel
0.5 A

Total current for actuators
4 A

Protection class
IP65

Logic/actuator voltage
Galvanically isolated

Diagnosis
Short circuit
Undervoltage

Number of outputs
2

Generic emission standard in accordance with norm
EN 61000-6-4

Generic immunity standard in accordance with norm
EN 61000-6-2

Weight
0.11 kg

Material

Housing material
Polyamide fiber-glass reinforced

Part No.
R412018281

Technical information

You will find assignment schemes for the product in the operating instructions, or contact the nearest AVENTICS sales office.

The total current of all outputs (including valves) must not exceed 4 A in the overall system.

Voltage and short-circuit monitoring per LED.

The input channels have an input resistance of 120 ohms in the current range and 100 kiloohms in the voltage range.

The output channels can drive a maximum ohmic load of 450 ohms in the current range. The minimum resistance in the voltage range is 1 kiloohm.

Delivery contents: incl. 2 spring clamp elements and seal

freely selectable signals, configurable

Dimensions

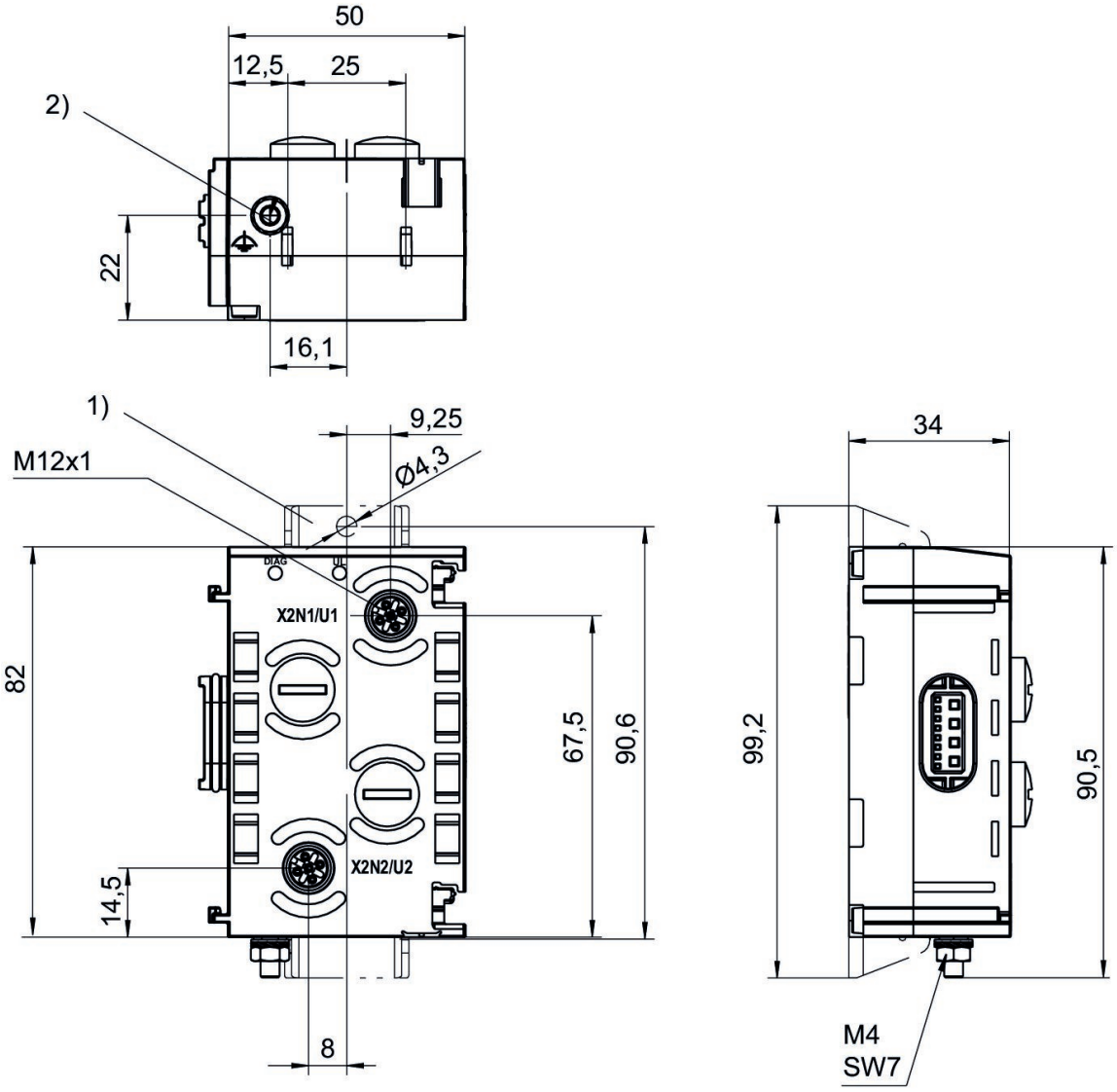

1) Retaining bracket (optional)
2) Ground

Pin assignments

Socket (female)

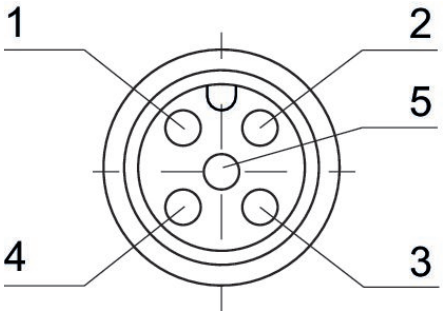

Pin	Socket (female) X2N1 - X2N2 2AI2M12-E	Socket (female) X2U1 - X2U4 4AI4M12-E	Socket (female) X2U1 - X2U2 2AO2M12-E
1	24 V DC	24 V DC	not assigned
2	Input signal (differential input, positive signal)	Input signal (differential input, positive signal)	Output signal
3	0 V DC	0 V DC	0 V DC
4	Input signal (differential input, negative signal, or connected externally to 0 V (pin 3))	Input signal (0 V, connected to pin 3 internally)	not assigned
5	Shield, connected internally with ground screw 2)	Shield, connected internally with ground screw 2)	Shield, connected internally with ground screw 2)

I/O modules, series AES

R412018287

General series information
Series AES

- The AVENTICS Series AES fieldbus connection can be integrated into all AVENTICS fieldbus-compatible valve systems or can also be configured as a stand-alone solution. AES connects your AVENTICS valve system to all relevant fieldbus protocols and offers the integration of I/O-modules and enables optimized decentralized wiring of sensors. The integration of the Digital Twin enables users to be IIoT ready and use the AES to solve their interoperability challenges.

Technical data

Industry
Industrial

Version
I/O modules

Type
2AI2AO2M12-AE

E/A capable
connection with I/O

I/O module version
analog inputs/outputs

Number of I/O connections
2 inputs / 2 outputs

Power plug IN type
Plug

Power plug IN size
M12x1

Power plug IN number of pole
4-pin

Signal connection E/A type
Socket

Signal connection E/A thread size
M12x1

Signal connection E/A number of poles
5-pin

Signal connection E/A coding
A-coded

Number of inputs
2

Number of outputs
2

Analog inputs
0 - 10 V / ± 10 V
2 - 10 V / ± 10 V
0 - 20 mA / ± 20 mA
4 - 20 mA / ± 20 mA

Analog outputs
0 - 10 V / ± 10 V
0 ... 20 mA
4 ... 20 mA

Min. ambient temperature
-10 °C

Max. ambient temperature
60 °C

Operational voltage electronics
24 V DC

Max. current per channel
1.2 A

Protection class
IP65

Logic/actuator voltage
Galvanically isolated

Diagnosis
Short circuit
Undervoltage

Generic emission standard in accordance with norm
EN 61000-6-4

Generic immunity standard in accordance with norm
EN 61000-6-2

Weight
0.11 kg

Material

Housing material
Polyamide fiber-glass reinforced

Part No.
R412018287

Technical information

You will find assignment schemes for the product in the operating instructions, or contact the nearest AVENTICS sales office.

The total current of all outputs (including valves) must not exceed 4 A in the overall system.

Suitable for direct connection of an electropneumatic pressure regulator from the ED series.

Delivery contents: incl. 2 spring clamp elements and seal

freely selectable signals, configurable

Dimensions

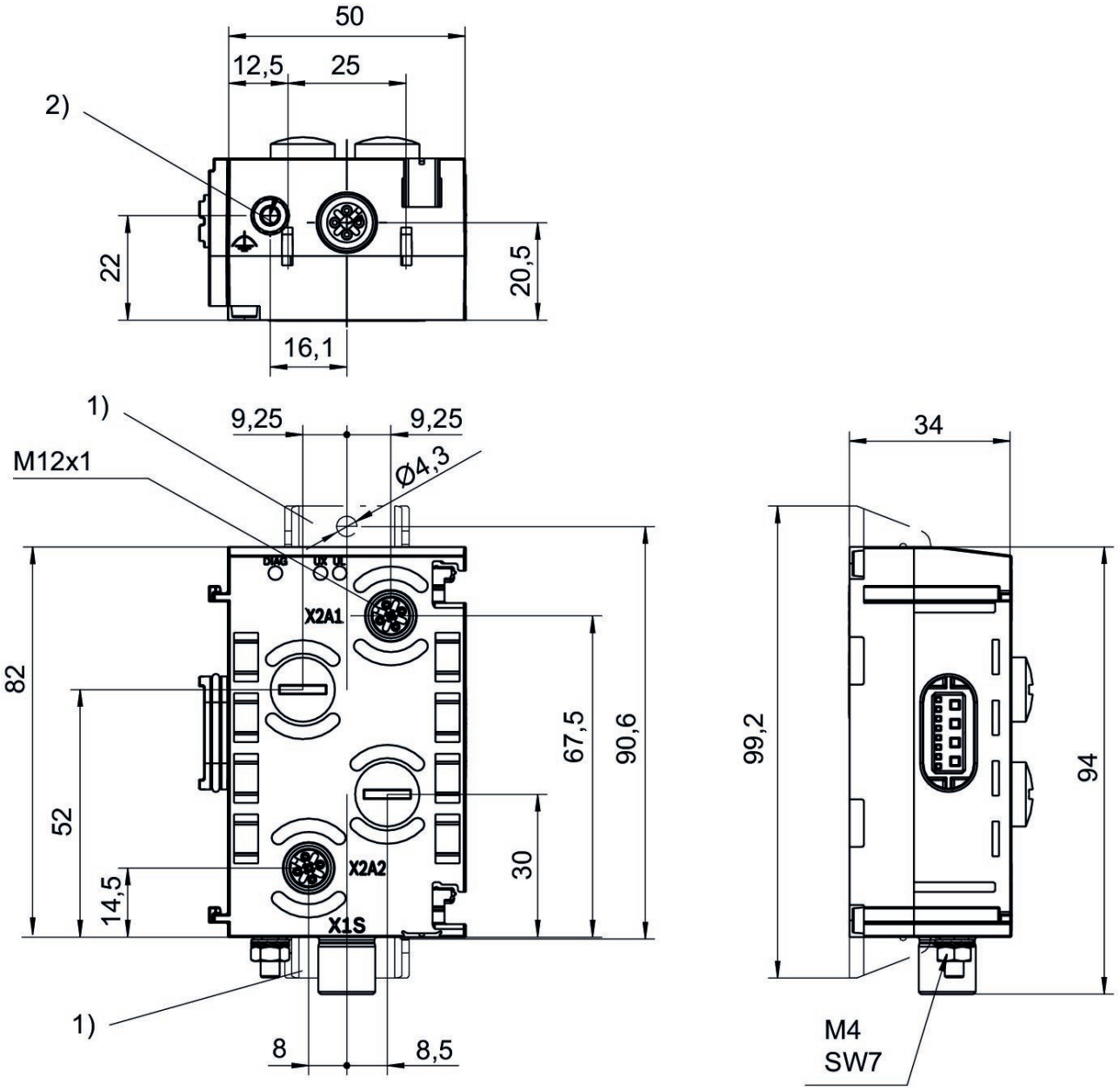

1) Retaining bracket (optional)
2) Ground

Plug (male)

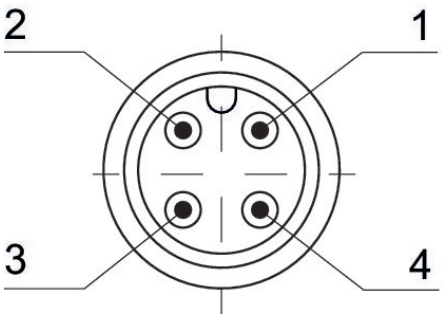

Pin assignments

Socket (female)

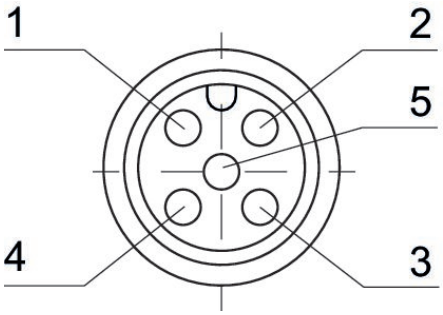

Pin	Socket (female) X2A1 - X2A2	Plug (male) X1S
1	24 V DC	-
2	Output signal	24 V DC
3	0 V DC	-
4	Input signal	0 V DC
5	Shield, connected internally with ground screw 2)	-

I/O modules, series AES

R412018293

General series information
Series AES

- The AVENTICS Series AES fieldbus connection can be integrated into all AVENTICS fieldbus-compatible valve systems or can also be configured as a stand-alone solution. AES connects your AVENTICS valve system to all relevant fieldbus protocols and offers the integration of I/O-modules and enables optimized decentralized wiring of sensors. The integration of the Digital Twin enables users to be IIoT ready and use the AES to solve their interoperability challenges.

Technical data

Industry
Industrial

Version
I/O modules

Type
2AI2AO2M12-C

Note
control module M12x1, 5-pin / with external power supply / control of E/P pressure regulators / position control / superordinate control

E/A capable
connection with I/O

I/O module version
analog inputs/outputs

Number of I/O connections
2 inputs / 2 outputs

Power plug IN type
Plug

Power plug IN size
M12x1

Power plug IN number of pole
4-pin

Signal connection E/A type
Socket

Signal connection E/A thread size
M12x1

Signal connection E/A number of poles
5-pin

Signal connection E/A coding
A-coded

Analog inputs
0 - 10 V / ± 10 V
2 - 10 V / ± 10 V
0 - 20 mA / ± 20 mA
4 - 20 mA / ± 20 mA

Analog outputs
0 - 10 V / ± 10 V
0 ... 20 mA
4 ... 20 mA

Min. ambient temperature
-10 °C

Max. ambient temperature
60 °C

Operational voltage electronics
24 V DC

Total current for actuators
4 A

Protection class
IP65

Logic/actuator voltage
Galvanically isolated

Diagnosis
Short circuit
Undervoltage

Generic emission standard in accordance with norm
EN 61000-6-4

Generic immunity standard in accordance with norm
EN 61000-6-2

Weight
0.11 kg

Material

Housing material
Polyamide fiber-glass reinforced

Part No.
R412018293

Technical information

Information on the assignment scheme and control parameters can be found in the operating instructions. Or, contact your nearest AVENTICS sales office.

The total current of all outputs (including valves) must not exceed 4 A in the overall system.

After direct connection to an electropneumatic pressure regulator suitable for controlling positions or superior control circuits.

Suitable for direct connection of an electropneumatic pressure regulator from the ED series.

Delivery contents: incl. 2 spring clamp elements and seal

freely selectable signals, configurable

Dimensions

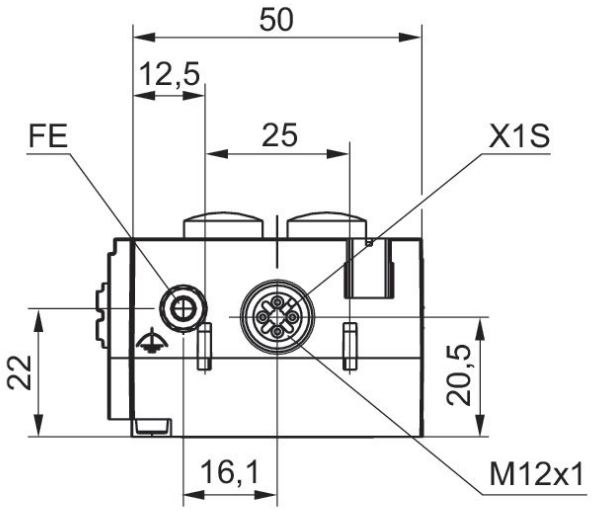

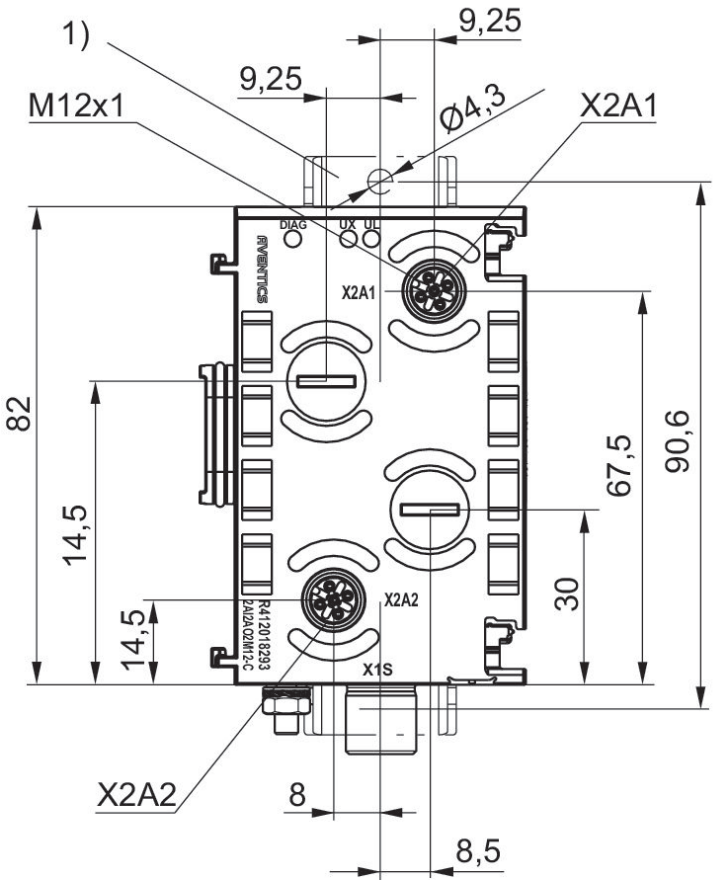

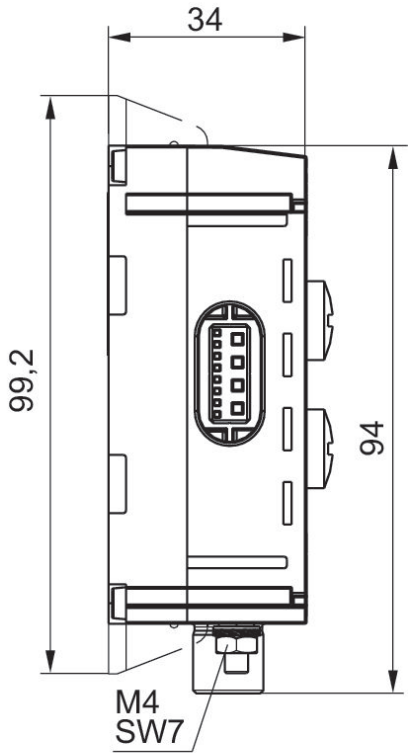

1) Retaining bracket (optional)

Pin assignments

Socket (female)

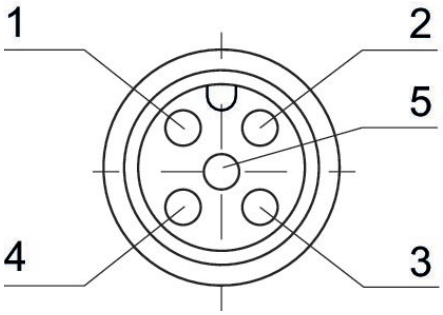

Pin	Socket (female) X2A1 - X2A2	Plug (male) X1S
1	24 V DC	-
2	Output signal	24 V DC
3	0 V DC	-
4	Input signal	0 V DC
5	Shield, connected internally with ground screw 2)	-

I/O modules, series AES

R412018252

General series information
Series AES

- The AVENTICS Series AES fieldbus connection can be integrated into all AVENTICS fieldbus-compatible valve systems or can also be configured as a stand-alone solution. AES connects your AVENTICS valve system to all relevant fieldbus protocols and offers the integration of I/O-modules and enables optimized decentralized wiring of sensors. The integration of the Digital Twin enables users to be IIoT ready and use the AES to solve their interoperability challenges.

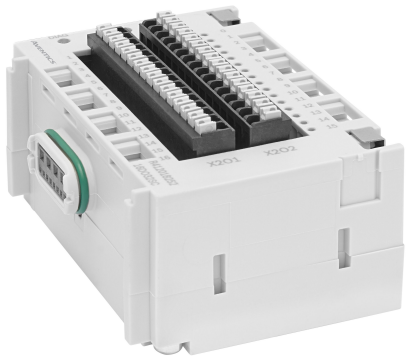

Technical data

Industry
Industrial

Version
I/O modules

Type
16DO32SC

E/A capable
connection with I/O

I/O module version
digital outputs

Number of I/O connections
16 outputs

Power plug IN type
Internal

Signal connection E/A type
Spring clamp connections

Min. ambient temperature
-10 °C

Max. ambient temperature
60 °C

Operational voltage electronics
24 V DC

Electronics voltage tolerance
-25% / +25%

Max. current per channel
0.5 A

Total current for actuators
4 A

Protection class
IP20

Logic/actuator voltage
Galvanically isolated

Diagnosis
Short circuit

Generic emission standard in accordance with norm
EN 61000-6-4

Generic immunity standard in accordance with norm
EN 61000-6-2

Weight
0.115 kg

Material

Housing material
Polyamide fiber-glass reinforced

Part No.
R412018252

Technical information

You will find assignment schemes for the product in the operating instructions, or contact the nearest AVENTICS sales office.

The total current of all outputs (including valves) must not exceed 4 A in the overall system.

Voltage and short-circuit monitoring per LED.

The clamp area for stranded wires is between 0.2 and 1.5 mm2.

Delivery contents: incl. 2 spring clamp elements and seal

Dimensions

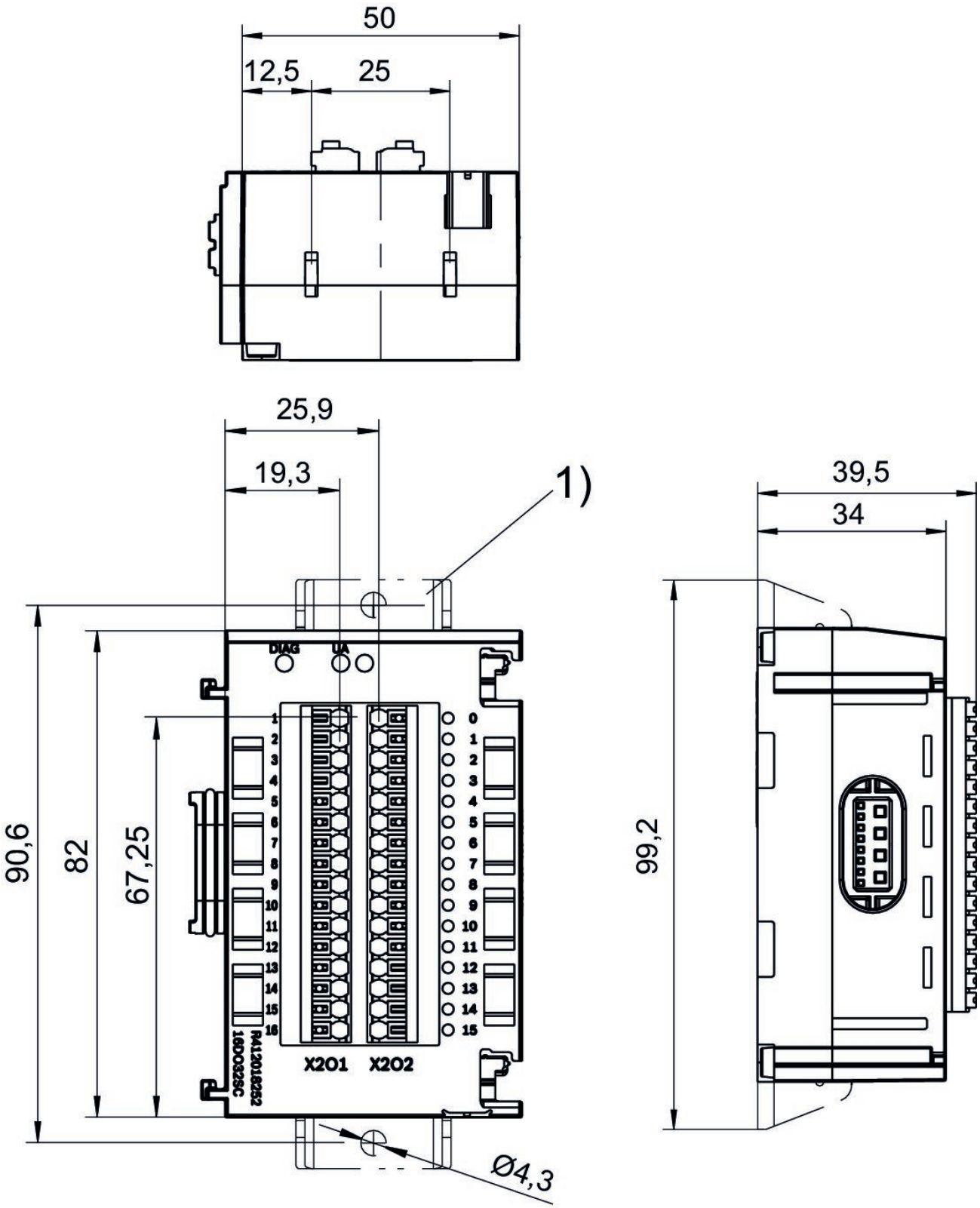

1) Retaining bracket (optional)

Port	Contact	Function
X201	1	Output signal 24 V DC bit 0.0
2	Output signal 24 V DC bit 0.1	
3	Output signal 24 V DC bit 0.2	
4	Output signal 24 V DC bit 0.3	
5	Output signal 24 V DC bit 0.4	
6	Output signal 24 V DC bit 0.5	
7	Output signal 24 V DC bit 0.6	
8	Output signal 24 V DC bit 0.7	
9	Output signal 24 V DC bit 1.0	
10	Output signal 24 V DC bit 1.1	
11	Output signal 24 V DC bit 1.2	
12	Output signal 24 V DC bit 1.3	
13	Output signal 24 V DC bit 1.4	
14	Output signal 24 V DC bit 1.5	
15	Output signal 24 V DC bit 1.6	
16	Output signal 24 V DC bit 1.7	

I/O modules, series AES

R412018291

General series information

Technical data

Industry
Industrial

Version
I/O modules

Type
4P4D4

port pneumatic
D4

Note
Pressure measurement module with 4 compressed air connection

E/A capable
connection with I/O

I/O module version
analog inputs

Number of I/O connections
4 inputs

Power plug IN type
Internal

Min. ambient temperature
-10 °C

Max. ambient temperature
60 °C

Working pressure max
10 bar

Measurement min.
0 bar

Measurement max.
10 bar

Protection class
IP65

Generic emission standard in accordance with norm
EN 61000-6-4

Generic immunity standard in accordance with norm
EN 61000-6-2

Weight
0.115 kg

Material

Housing material	Part No.
Polyamide fiber-glass reinforced	R412018291

Technical information

When using polyurethane tubing, we recommend using additional stiffener sleeves.

For push-in fittings, only use plug accessories made of plastic (polyamide) from our catalog.

The pressure dew point must be at least 15 °C under ambient and medium temperature and may not exceed 3 °C .

Dimensions

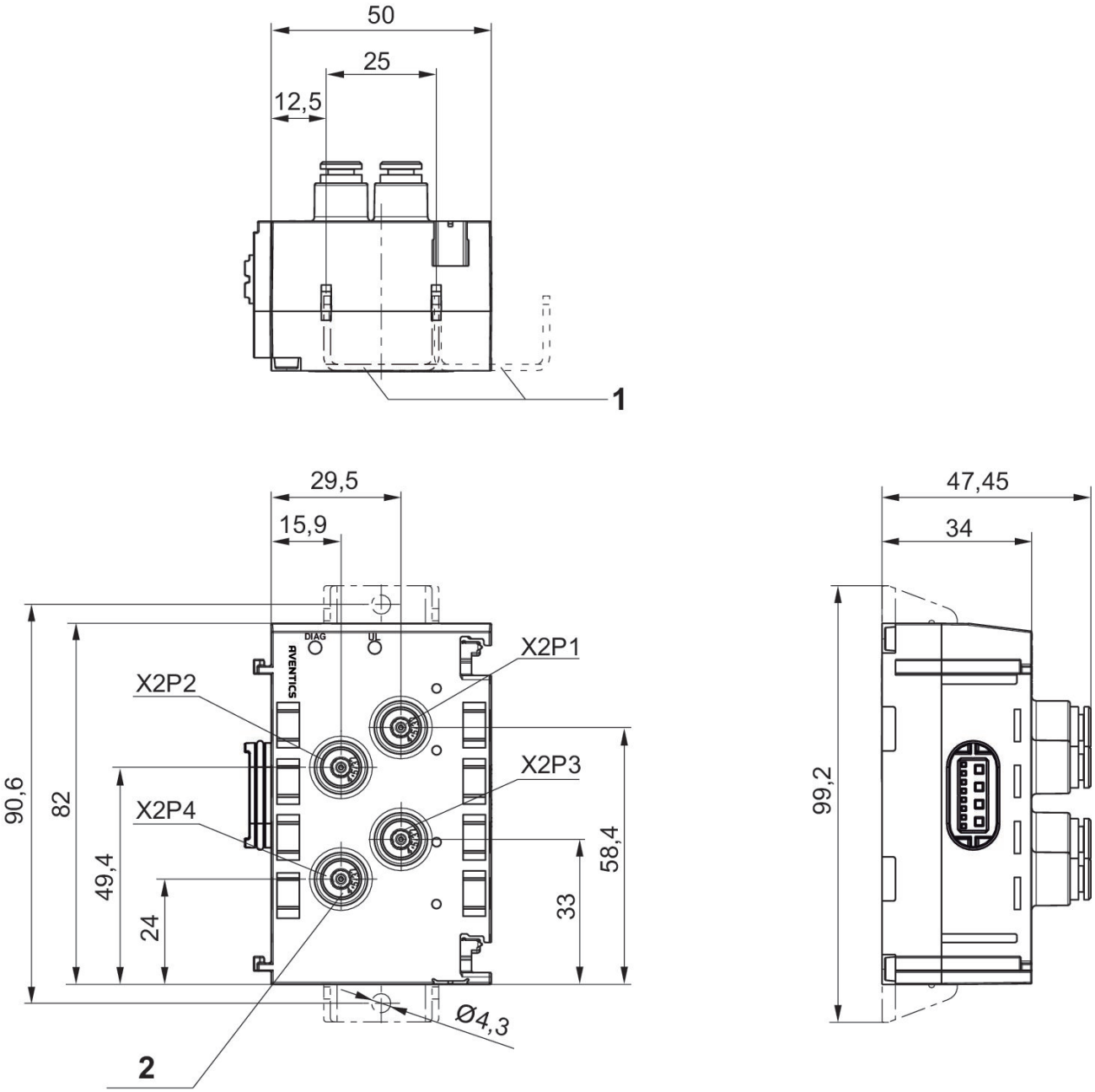

1) Retaining bracket (optional)
2) Blanking plug included in scope of delivery

I/O modules, series AES

R412018292

General series information

Technical data

Industry
Industrial

Version
I/O modules

Type
4VP4D4

port pneumatic
D4

Note
Pressure measurement module with 4 compressed air connection

E/A capable
connection with I/O

I/O module version
analog inputs

Number of I/O connections
4 inputs

Power plug IN type
Internal

Min. ambient temperature
-10 °C

Max. ambient temperature
60 °C

Working pressure max
1 bar

Measurement min.
-1 bar

Measurement max.
1 bar

Protection class
IP65

Generic emission standard in accordance with norm
EN 61000-6-4

Generic immunity standard in accordance with norm
EN 61000-6-2

Weight
0.115 kg

Material

Housing material	Part No.
Polyamide fiber-glass reinforced	R412018292

Technical information

When using polyurethane tubing, we recommend using additional stiffener sleeves.

For push-in fittings, only use plug accessories made of plastic (polyamide) from our catalog.

The pressure dew point must be at least 15 °C under ambient and medium temperature and may not exceed 3 °C .

Dimensions

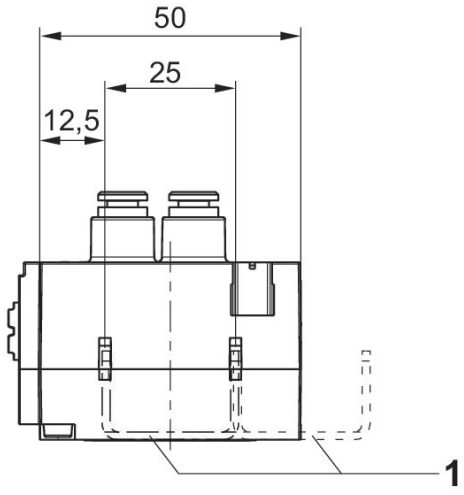

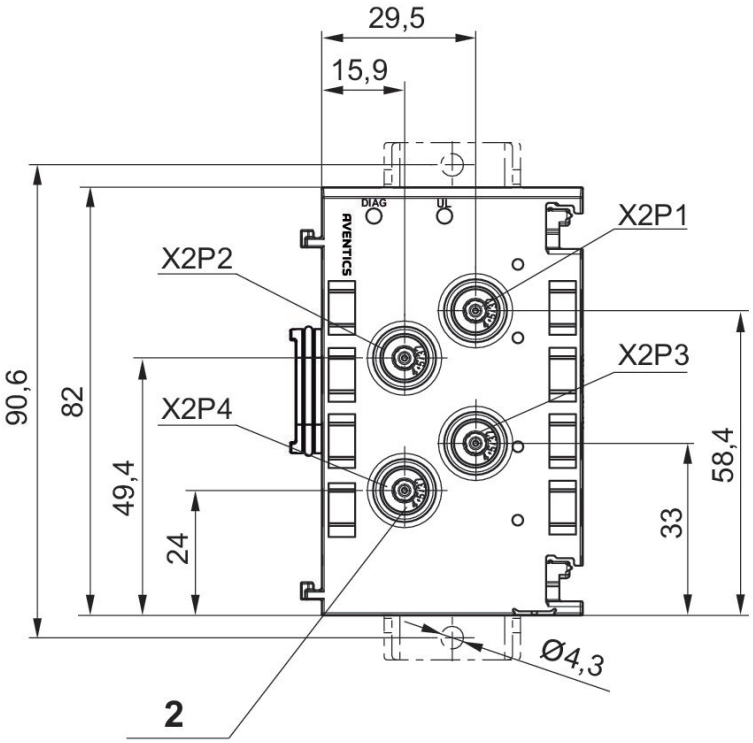

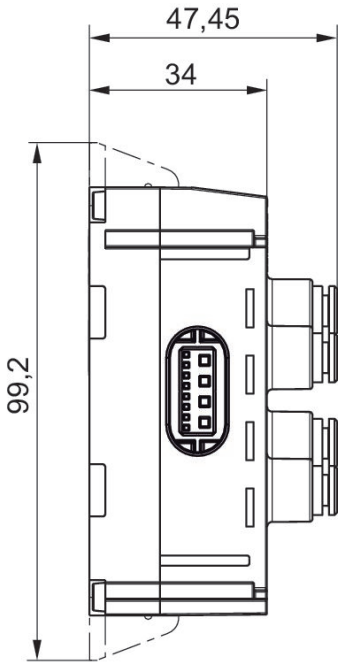

1) Retaining bracket (optional)
2) Blanking plug included in scope of delivery

Power module Series AES

R412018272

General series information
Series AES

- The AVENTICS Series AES fieldbus connection can be integrated into all AVENTICS fieldbus-compatible valve systems or can also be configured as a stand-alone solution. AES connects your AVENTICS valve system to all relevant fieldbus protocols and offers the integration of I/O-modules and enables optimized decentralized wiring of sensors. The integration of the Digital Twin enables users to be IIoT ready and use the AES to solve their interoperability challenges.

Technical data

Industry
Industrial

Version
Power module

E/A capable
connection with I/O

Power plug IN type
Plug

Power plug IN size
7/8″-16UNF

Power plug IN number of pole
5-pin

Power plug OUT type
Socket

Power plug OUT size
7/8″-16UNF

Power plug OUT number of pole
5-pin

Power supply direction UA/UL
left, right

Min. ambient temperature
-10 °C

Max. ambient temperature
60 °C

Operational voltage electronics
24 V DC

Electronics voltage tolerance
-20% / +20%

Operating voltage, actuators
24 V DC

Actuator voltage tolerance
-10% / +10%

Total current for actuators
4 A

Protection class
IP65

Total current of sensors max.
4 A

Generic emission standard in accordance with norm
EN 61000-6-4

Generic immunity standard in accordance with norm
EN 61000-6-2

Weight
0.15 kg

Material

Housing material
Polyamide fiber-glass reinforced

Part No.
R412018272

Technical information

You will find assignment schemes for the product in the operating instructions, or contact the nearest AVENTICS sales office.

The supply voltage from X1S1 is available at X1S2 (without modification)

The total internal current (UA or UL) and consumption at X1S2 must not exceed 8A at X1S1.

UL: Logic voltage (power supply for electronic components and sensors)

UA: Actuator voltage (power supply for valves and outputs)

If connection 2 is not used for forwarding, it must be closed with sealing cap R412024838.

Power plug X1S on the bus coupler must be closed with sealing cap R412024837.

Dimensions

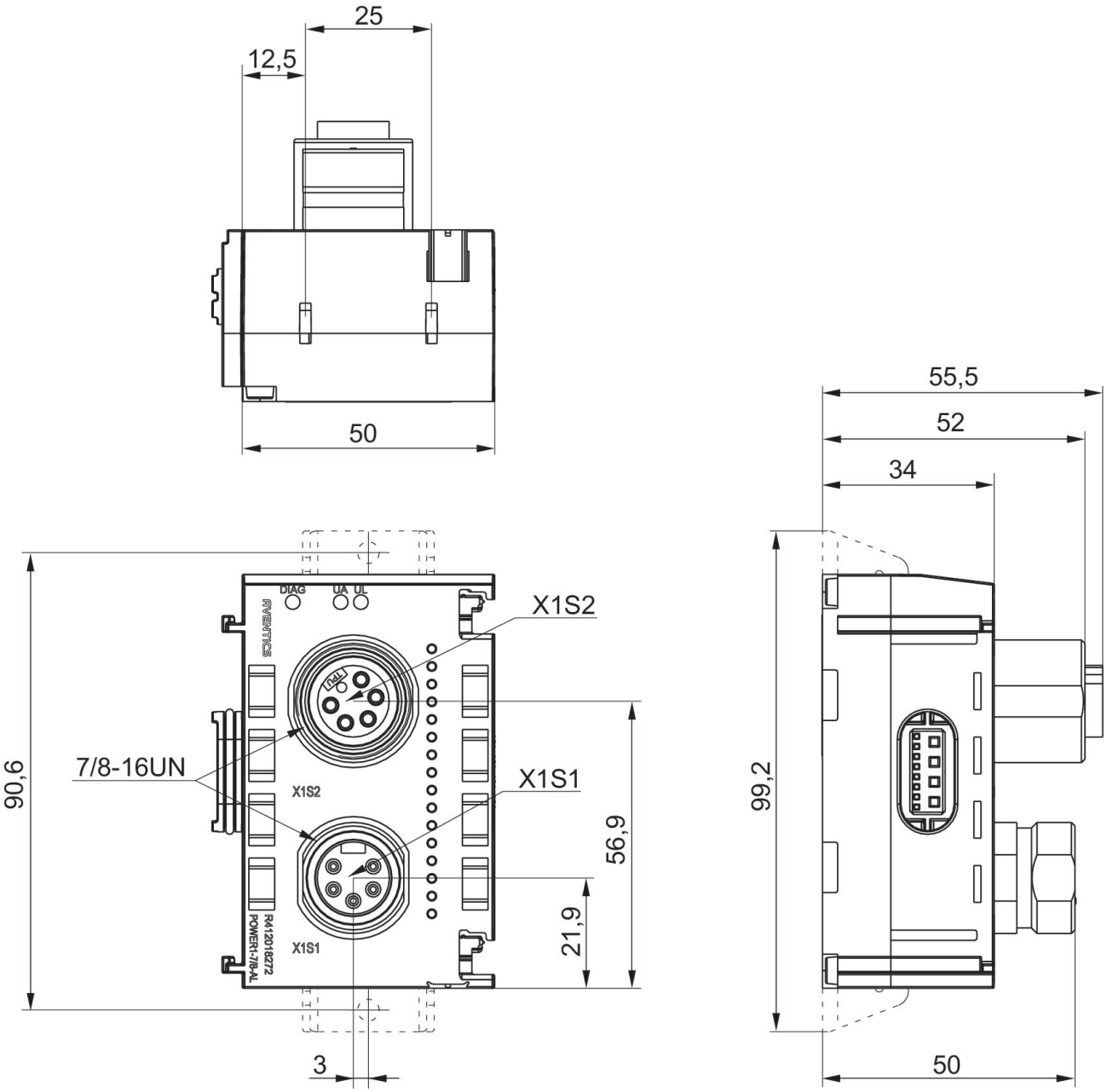

Port 1, X1S1
Port 2, X1S2

Pin assignments

PNP

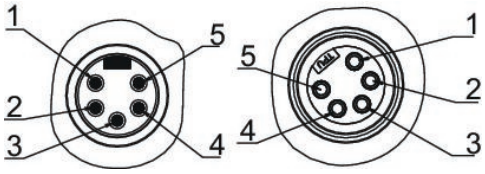

Pin	Plug X1S1	Socket X1S2
1	0 V DC (UA)	0 V DC (UA)
2	0 V DC (UL)	0 V DC (UL)
3	FE	FE
4	24 V DC power supply (UL) input	24 V DC power supply (UL) output
5	24 V DC power supply (UA) input	24 V DC power supply (UA) output

Blanking plate

- Base plate principle, multiple
- Reversed pressure supply permissible
- With collective pilot air exhaust
- for AV05

Working pressure min./max.	-0.9 ... 10 bar
Ambient temperature min./max.	-10 ... 60 °C
Medium temperature min./max.	-10 ... 60 °C
Medium	Compressed air
Max. particle size	40 µm
Oil content of compressed air	0 ... 5 mg/m³
Protection class	IP65
Mounting screw	Hexalobular socket (TORX) ISO 10664-8
Tightening torque for mounting screws	0.5 Nm
Weight	0.03 kg

Technical data

Part No.	Delivery unit
R422102526	1 piece

Delivery includes sealing kit and 1x mounting screw

Technical information

The min. control pressure must be adhered to, since otherwise faulty switching and valve failure may result!
The pressure dew point must be at least 15 °C under ambient and medium temperature and may not exceed 3 °C .
The oil content of compressed air must remain constant during the life cycle.
Use only the approved oils from AVENTICS. Further information can be found in the “Technical information” document (available in the MediaCentre).

Technical information

Material	
Screws	Steel, galvanized

Dimensions

Dimensions

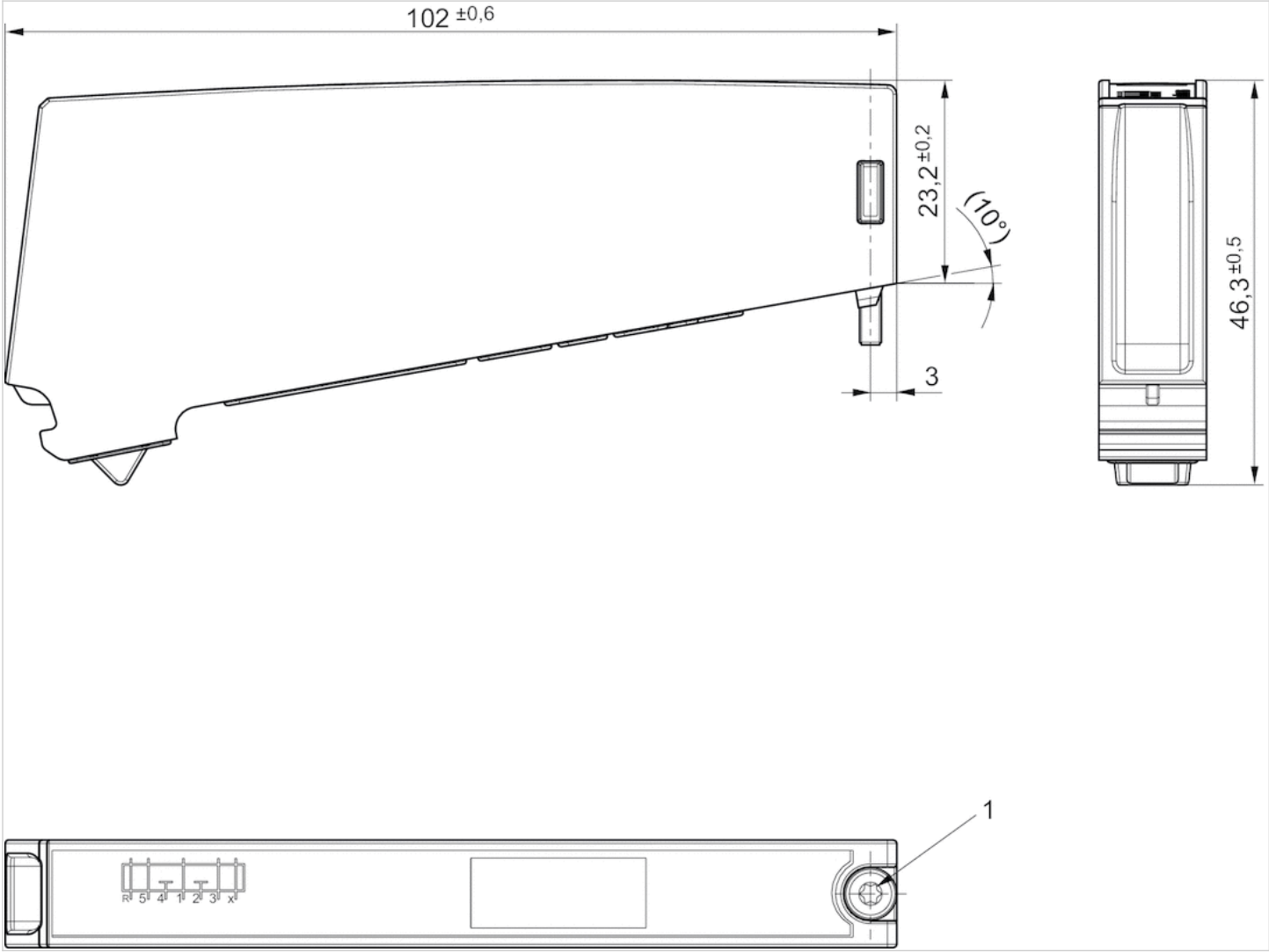

1) Mounting screw

Pressure regulator, Series AV

- push-in fitting
- Controlled port 2, 4

Adjustment range min./max.	0.5 ... 10 bar
Ambient temperature min./max.	-10 ... 60 °C
Medium temperature min./max.	-10 ... 60 °C
Medium	Compressed air
Weight	0.02 kg

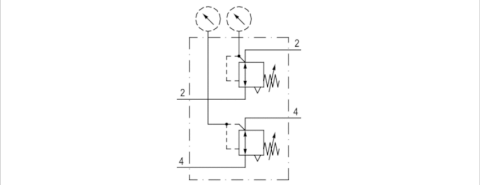

Technical data

Part No.	Compressed air connection type Input	Compressed air connection Output	Repetitive precision	Controlled port
R422103084	push-in fitting	Ø 6	± 10 %	2, 4
R422103085	push-in fitting	Ø 8	± 10 %	2, 4
R422103086	push-in fitting	Ø 1/4″	± 10 %	2, 4

Order pressure gauge separately

Technical information

Kit for stacking assembly of up to 6 regulators: R422103090
Mounting bracket (2x) for mounting to the mounting plate: R422103091
For 2 or more AV pressure regulators assembled into blocks with pressure gauges, use of push-in fitting R412005046 is recommended for every second pressure gauge

Technical information

Material	
Housing	Aluminum
Seals	Acrylonitrile butadiene rubber

Dimensions

Dimensions

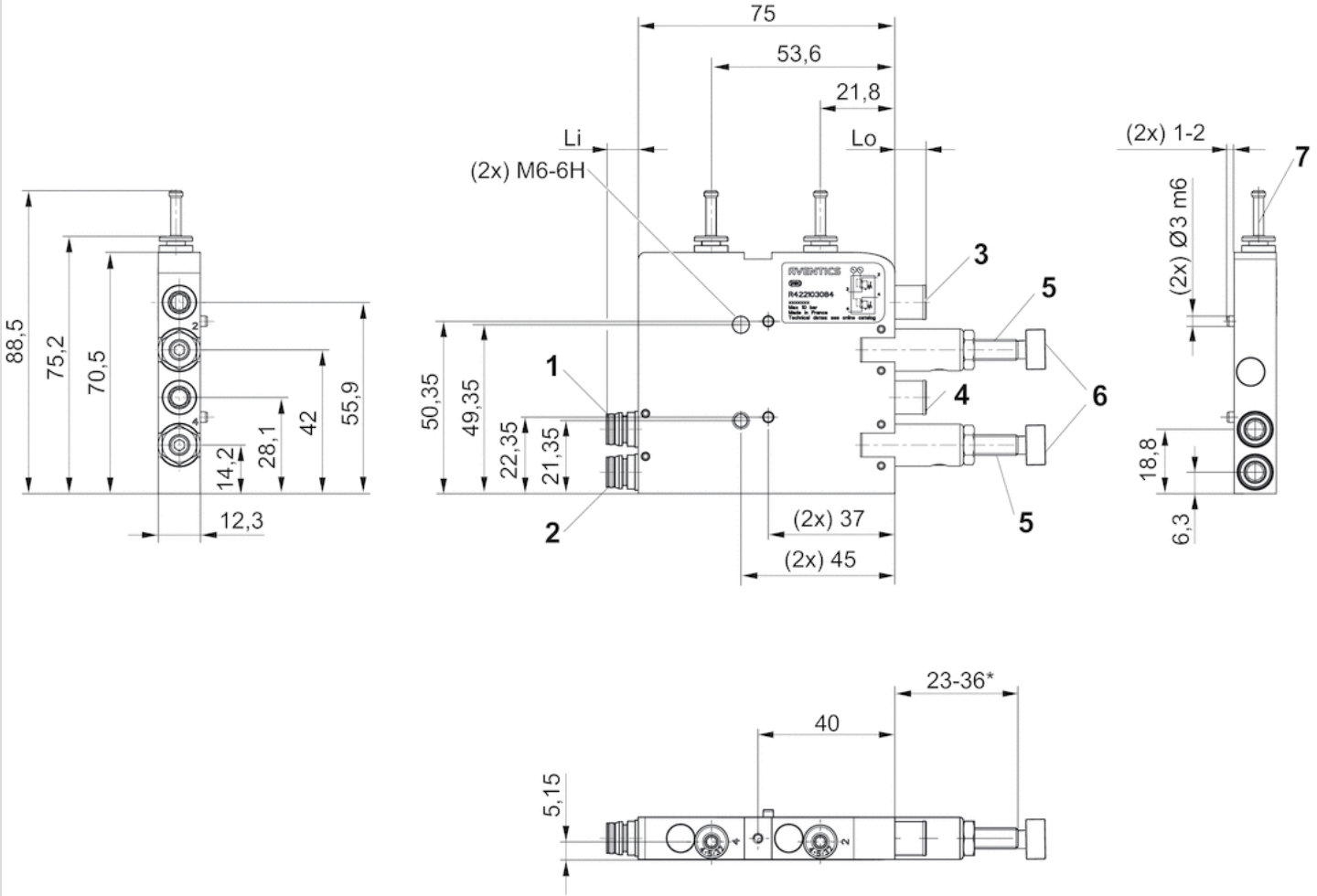

1) Connection 2, valve side
2) Connection 4, valve side
3) Operating line 2
4) Operating line 4
5) adjustment screw, Port 2
6) Adjustment screw, connection 4
7)blanking plug*) Stroke

Diagrams

Flow diagram, Port 2

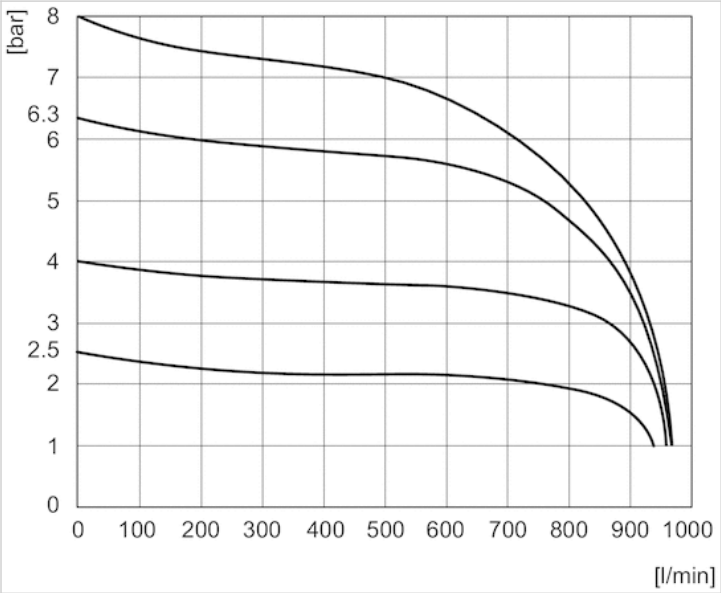

Pv = 9 bar

Flow diagram, Port 4

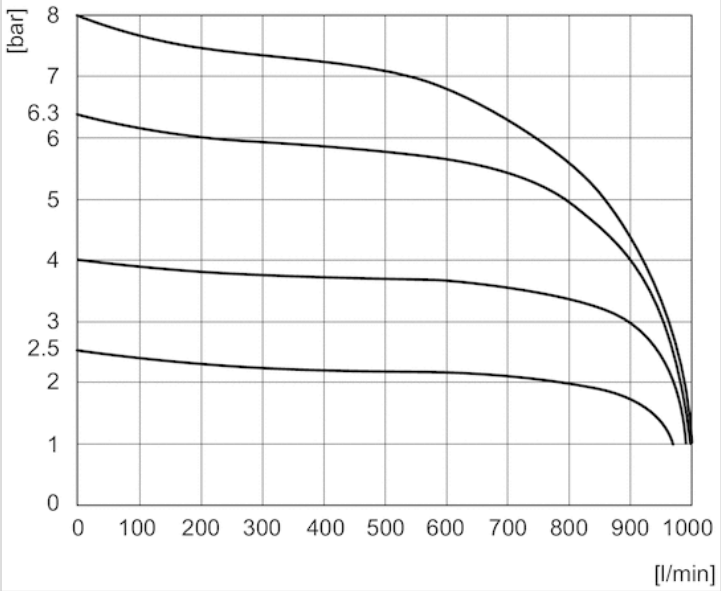

Pv = 9 bar

Pressure regulator, Series AV

- push-in fitting
- Controlled port 2 4

Adjustment range min./max.	0.5 ... 10 bar
Ambient temperature min./max.	-10 ... 60 °C
Medium temperature min./max.	-10 ... 60 °C
Medium	Compressed air
Weight	0.2 kg

Technical data

Part No.		Compressed air connection type Input	Compressed air connection Output	Repetitive precision
R422003560		push-in fitting	Ø 8	± 10 %
R422003561		push-in fitting	Ø 6	± 10 %
R422003568		push-in fitting	Ø 8	± 10 %
R422003569		push-in fitting	Ø 6	± 10 %

Part No.	Controlled port
R422003560	2
R422003561	2
R422003568	4
R422003569	4

Order pressure gauge separately

Technical information

Pneumatic connection to base plate valves, suitable for all sizes in the AV03 and AV05 series
Mounting bracket (2x) for mounting to the mounting plate: R422103091
For 2 or more AV pressure regulators assembled into blocks with pressure gauges, use of push-in fitting R412005046 is recommended for every second pressure gauge

Technical information

Material	
Housing	Aluminum
Seals	Acrylonitrile butadiene rubber

Dimensions

Dimensions

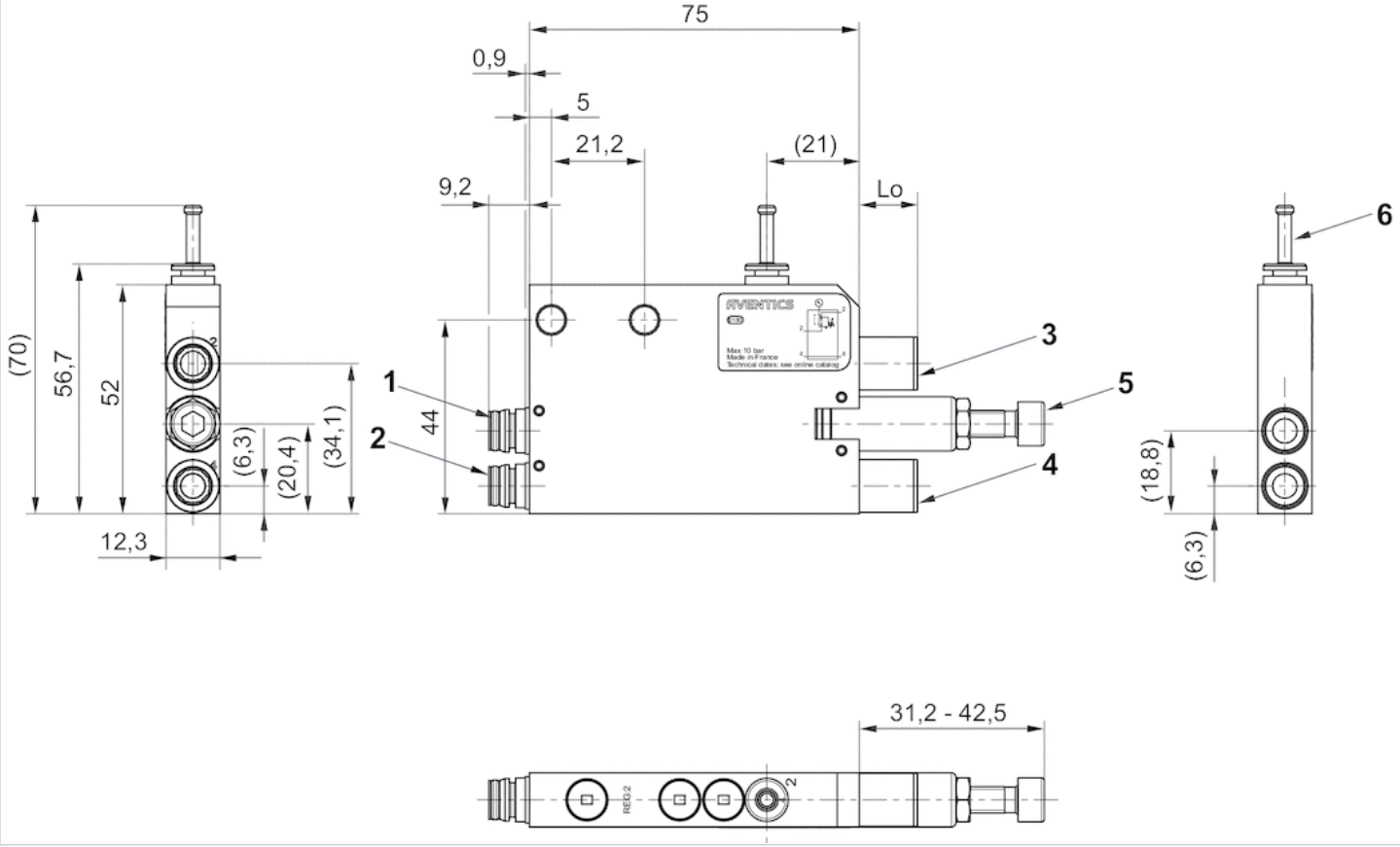

1) Connection 2, valve side
2) Connection 4, valve side
3) Operating line 2
4) Operating line 4
5) adjustment screw, Port 2, 4
6) plugs

Diagrams

Flow diagram, Port 2

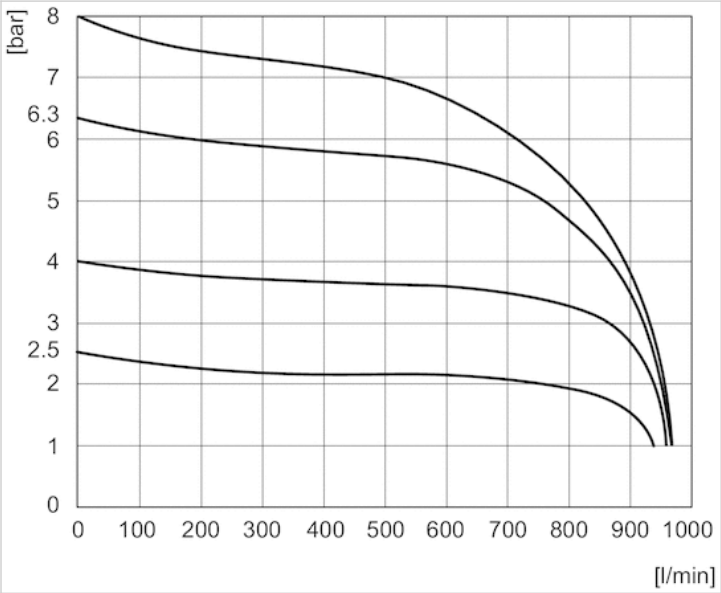

Pv = 9 bar

Flow diagram, Port 4

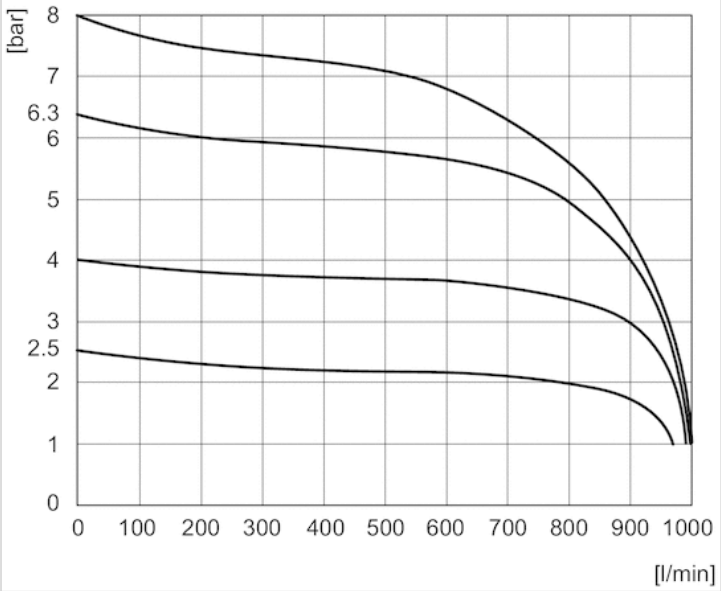

Pv = 9 bar

Pressure gauge, Series PG1-ROB

- Back port
- Background color Black
- Scale color White
- Viewing window Polystyrene
- Units MPa

Version	Bourdon tube pressure gauge
Medium	Compressed air Compressed air
Main scale unit (outside)	MPa
Main scale color (outside)	White
Background color	Black
Pointer color	Red
Weight	0.01 kg

Technical data

Part No.	Compressed air connection	Nominal diameter	Range of application	Display range
R412009413	Ø 4	15 mm	0 ... 10 bar	0 ... 10 bar

Technical information

Material	
Housing	Acrylonitrile butadiene styrene
Thread	Brass
Viewing window	Polystyrene
Seal	Polytetrafluorethylene

Dimensions

Dimensions in mm

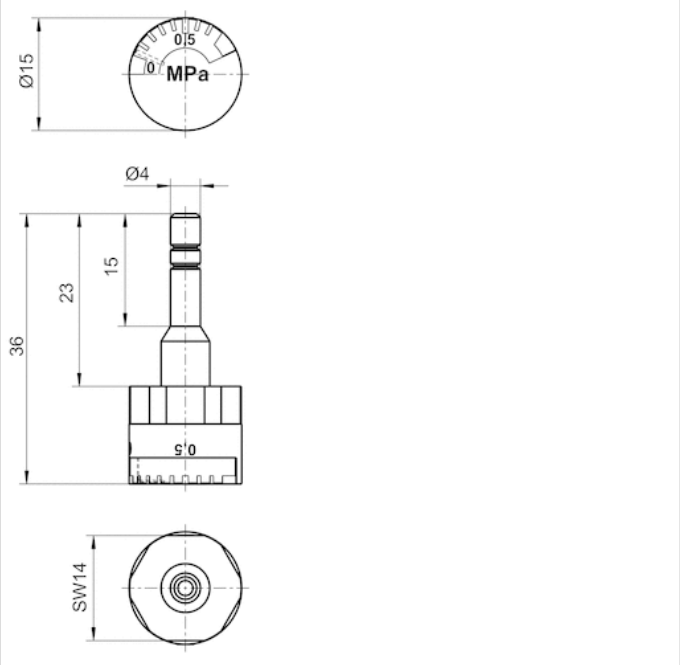

Series QR1-S-RVW Mini

- Angled plug-in connector
- pin bushing
- Ø 4
- push-in fitting
- Ø 4
- QR1-S-RVW

Working pressure min./max.	-0.95 ... 10 bar
Ambient temperature min./max.	0 ... 60 °C
Weight per piece	0.002 kg

Technical data

Part No.	Port G	Port D	Delivery unit
R412005046	Ø 4	Ø 4	10 piece

Technical information

The series QR1 (plastic) and QR2 (metal) can not be combined
For use with 2 or more AV pressure regulators assembled into blocks with pressure gauges.
For 2 or more AV pressure regulators assembled into blocks with pressure gauges, use of push-in fitting R412005046 is recommended for every second pressure gauge

For further information about assembling and tolerances of adaptable tubing can be found in the “Technical information” document (available in the MediaCentre).

Technical information

Material	
Material	nickel-plated
Housing	Polybutyleneterephthalate
Seal	Acrylonitrile butadiene rubber
Tooth lock washer	Stainless steel
Release ring	Polyoxymethylene
Release ring holder	Die cast zinc Brass, nickel-plated

Dimensions

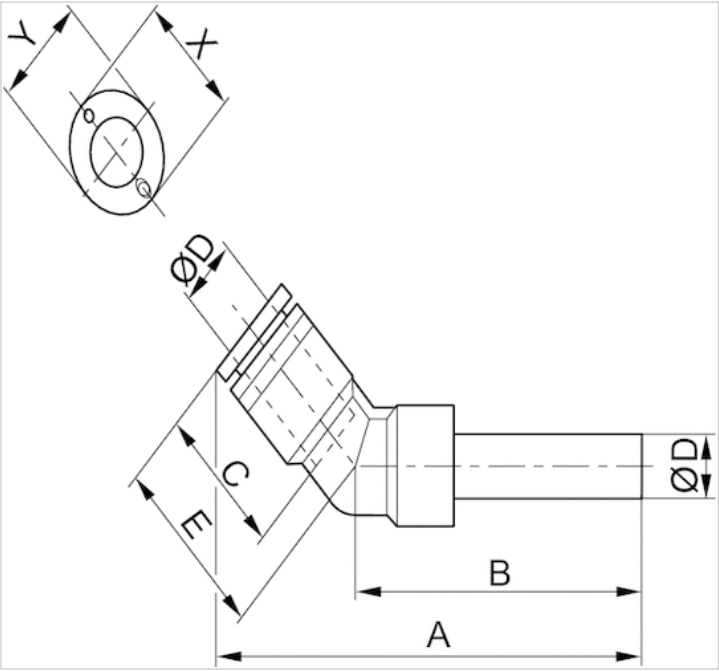

Dimensions

Part No.	Port D	Port G	A	B	C	E	X	Y
R412005046	Ø 4	Ø 4	56,36	43,6	16	18.1	12	10

Throttle module

- push-in fitting
- direction of throttle 2 ▸ 1 direction of throttle 2 ▸ 1
direction of throttle 1 ▸ 2

Working pressure min./max.	10 bar
Ambient temperature min./max.	-10 ... 60 °C
Medium temperature min./max.	-10 ... 60 °C
Medium	Compressed air
Weight	0.115 kg

Technical data

Part No.		Version
R422003311		direction of throttle 2 ▸ 1
R422003267		direction of throttle 2 ▸ 1
R422003666		direction of throttle 2 ▸ 1
R422003577		direction of throttle 2 ▸ 1 direction of throttle 1 ▸ 2
R422003578		direction of throttle 2 ▸ 1 direction of throttle 1 ▸ 2
R422003667		direction of throttle 2 ▸ 1 direction of throttle 1 ▸ 2

Part No.	Compressed air connection type Input	Compressed air connection Output	Fig.
R422003311	push-in fitting	Ø 6	Fig. 1
R422003267	push-in fitting	Ø 8	Fig. 1
R422003666	push-in fitting	Ø 1/4″	Fig. 1
R422003577	push-in fitting	Ø 6	Fig. 2
R422003578	push-in fitting	Ø 8	Fig. 2
R422003667	push-in fitting	Ø 1/4″	Fig. 2

Technical information

Material	
Housing	Aluminum
Seals	Acrylonitrile butadiene rubber

Dimensions

Dimensions

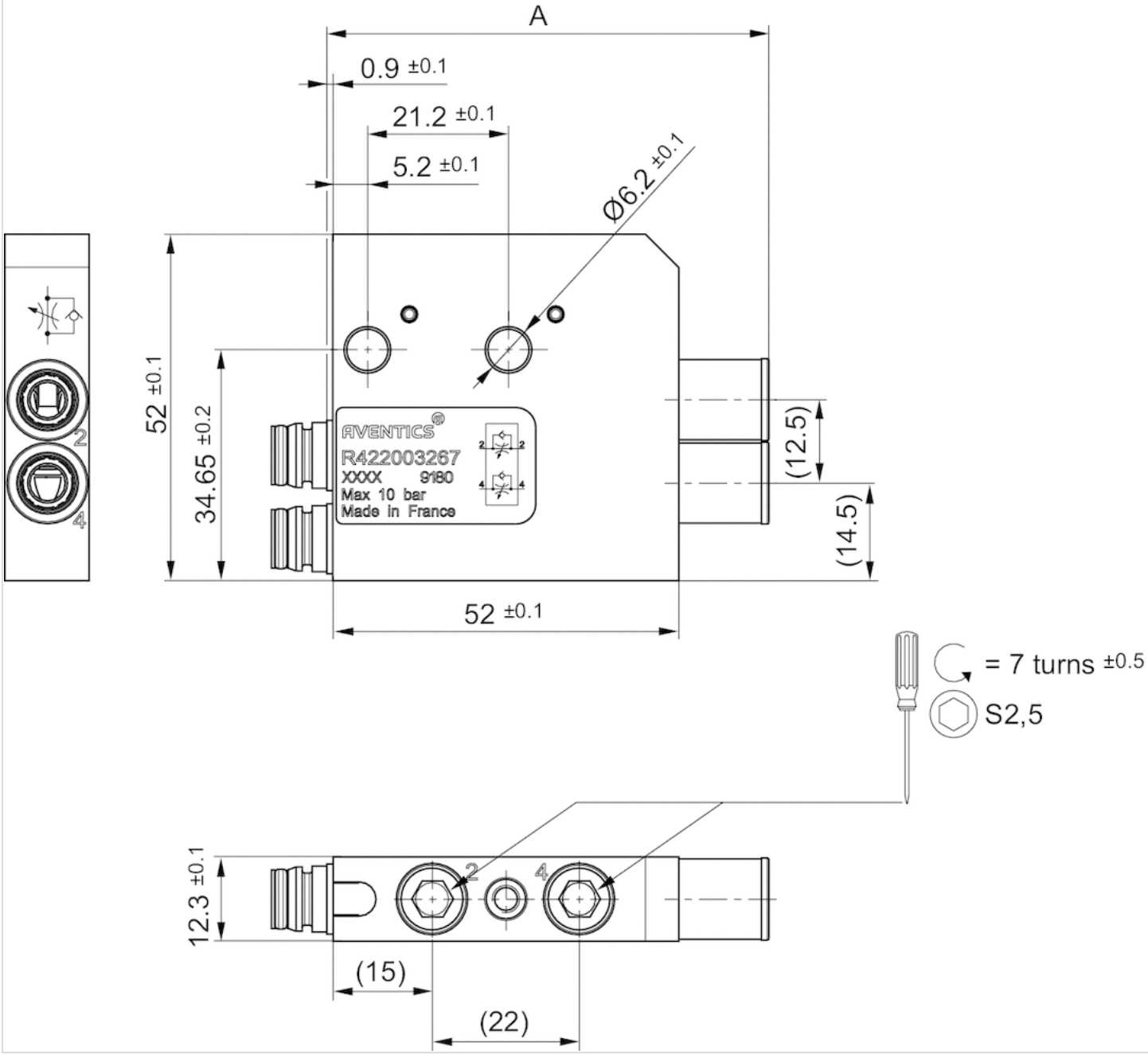

Dimensions

Part No.		R422003311	R422003267	R422003666	R422003577	R422003578	R422003667
Installation length	A	62.2±0.5	66.2±0.5	65.2±0.5	62.2±0.5	66.2±0.5	65.2±0.5

Diagrams

Fig. 1, single solenoid

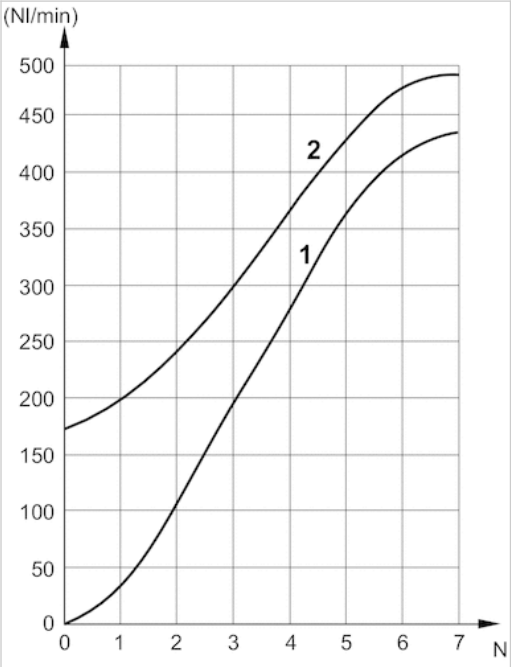

1) Controlled flow
2) Uncontrolled flow

Fig. 2, double solenoid

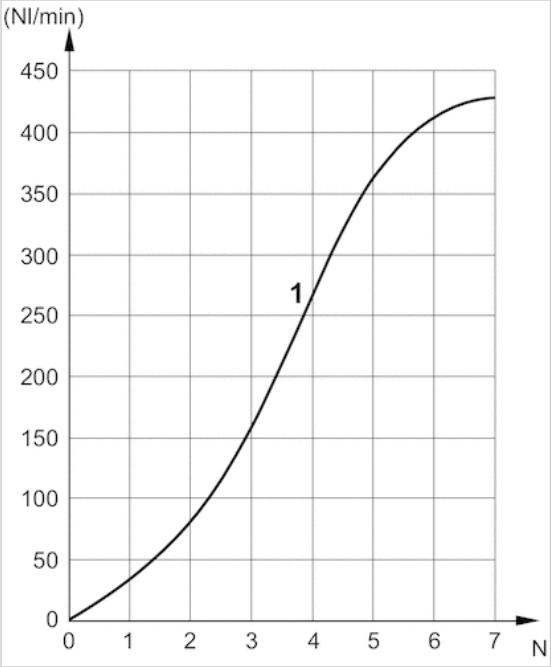

1) Controlled flow

Flow rate coupler Series AV

- For port channels 2, 4
- push-in fitting

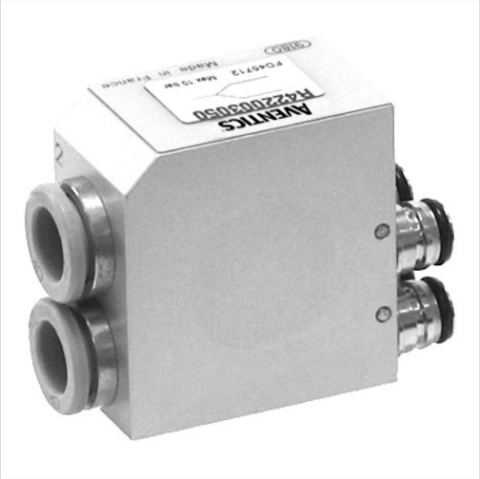

Working pressure min./max.	-0.95 ... 10 bar
Ambient temperature min./max.	-10 ... 60 °C
Medium	Compressed air
Weight	0.115 kg

Technical data

Part No.	Type	Fig.
R422003050	2 x Ø 10	Fig. 1
R422003060	1 x Ø 10	Fig. 2

Technical information

When using polyurethane tubing, we recommend using additional stiffener sleeves.
For push-in fittings, only use plug accessories made of plastic (polyamide) from our catalog.
Pneumatic connection to base plate valves, suitable for all sizes in the AV03 and AV05 series
Doubling of flow rate performance by connecting the working connections of two valves.
Both valves must be identical models and controlled electrically at the same time.

Technical information

Material	
Housing	Aluminum
Seals	Nitrile rubber

Dimensions

Fig. 1

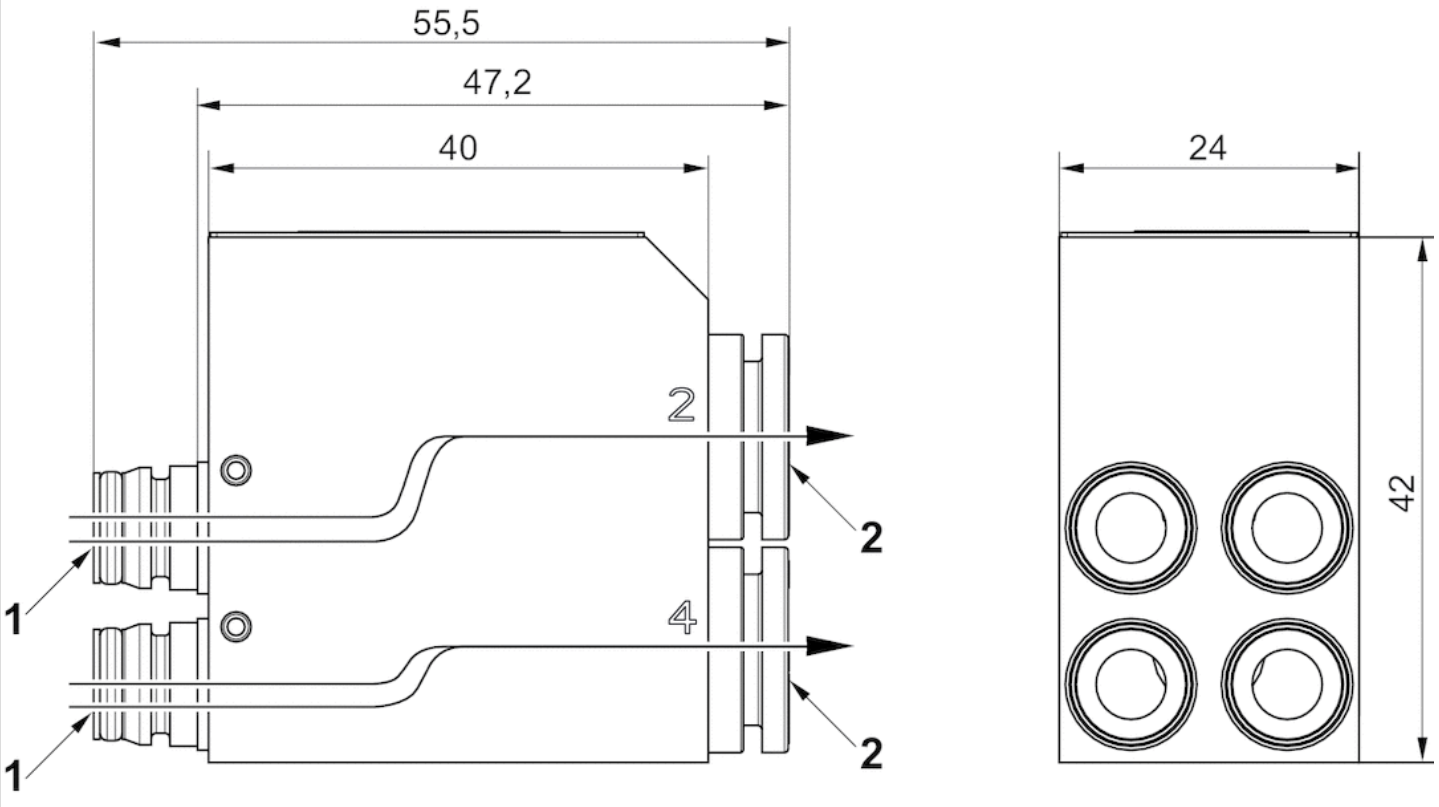

1) Pneumatic connection to base plate valves, suitable for all sizes in the AV03 and AV05 series
2) 2 x Ø 10

Dimensions

Number of valves	2	2	2	2	2	2
Valve function	5/2	5/3	2x3/2	5/2	5/3	2x3/2
Series	AV03	AV03	AV03	AV05	AV05	AV05
Flow [l/min]	670	670	670	1100	1100	1100

Dimensions

Fig. 2

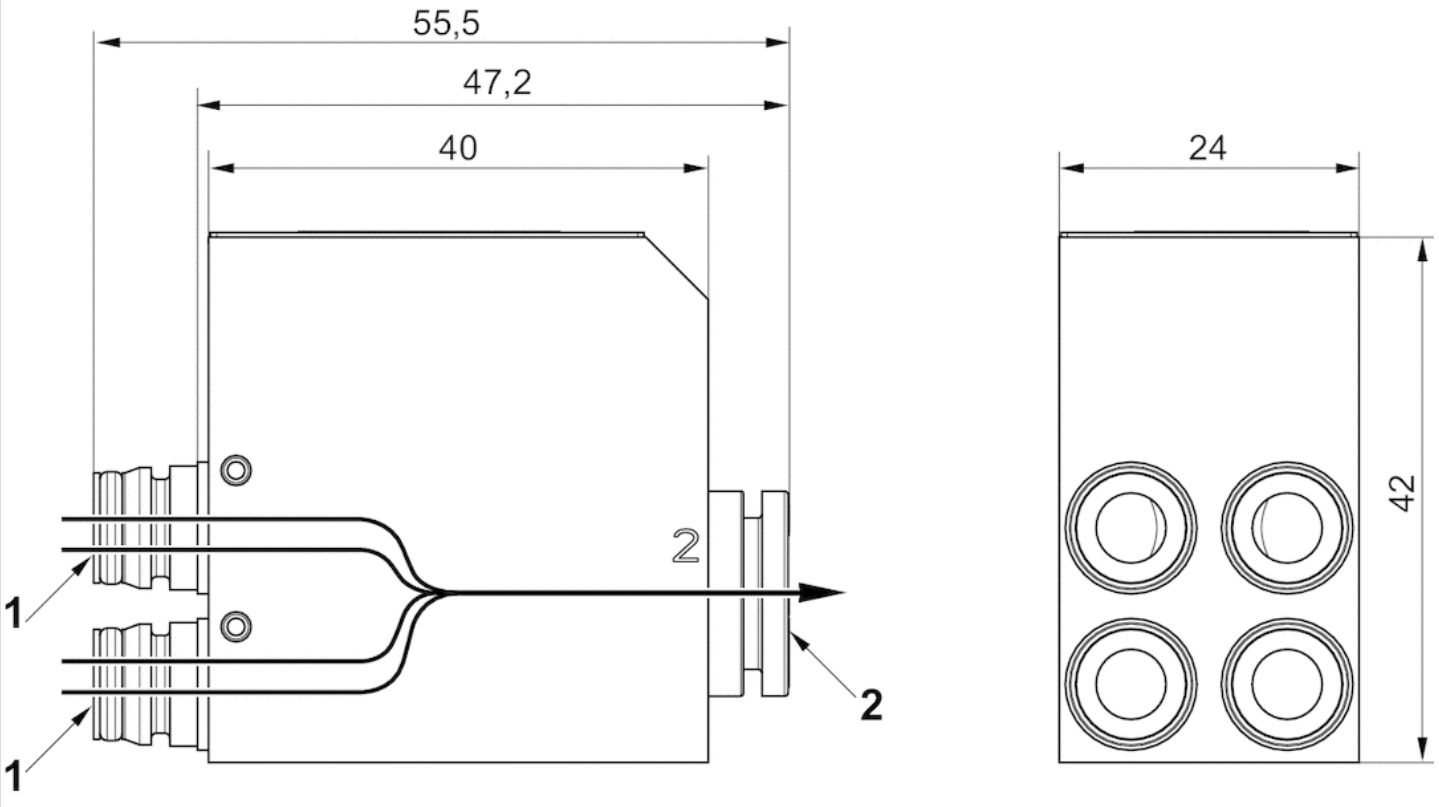

1) Pneumatic connection to base plate valves, suitable for all sizes in the AV03 and AV05 series
2) 1 x Ø 10

Dimensions

Number of valves	2	2
Valve function	2x3/2	2x3/2
Series	AV03	AV05
Flow [l/min]	830	1400

Extension kit for base plate 2x

Working pressure min./max.	-0.95 ... 10 bar
Ambient temperature min./max.	-10 ... 60 °C
Medium	Compressed air

Technical data

Part No.	Type
R412020064	Base plate 2x for single solenoid valves for multipole plug
R412020065	Base plate 2x for double solenoid valves for multipole plug
R412020068	Base plate 2x for bus coupler

Part No.	Housing material
R412020064	Polyamide fiber-glass reinforced
R412020065	Polyamide fiber-glass reinforced
R412020068	Polyarylamide, fiber-glass reinforced

Part No.	Scope of delivery
R412020064	Base plate (1), incl. 2 nuts (2), 2 labels (3), 1 seal (4), 1 retaining clip (5), 2 tie rod extensions (6), and 1 extension circuit board (7)
R412020065	Base plate (1), incl. 2 nuts (2), 2 labels (3), 1 seal (4), 1 retaining clip (5), 2 tie rod extensions (6), and 1 extension circuit board (7)
R412020068	Base plate (1), incl. 2 nuts (2), 2 labels (3), 1 seal (4), 1 retaining clip (5), 2 tie rod extensions (6), and 1 extension circuit board (7)

Technical information

When using polyurethane tubing, we recommend using additional stiffener sleeves.
For push-in fittings, only use plug accessories made of plastic (polyamide) from our catalog.
After three I/O modules or 8 valves, mount a retaining bracket (R412018339) to fasten the entire unit to the mounting surface.

Technical information

Material	
Housing	Polyamide fiber-glass reinforced Polyarylamide, fiber-glass reinforced
Seals	Nitrile rubber

Dimensions

Overview drawing

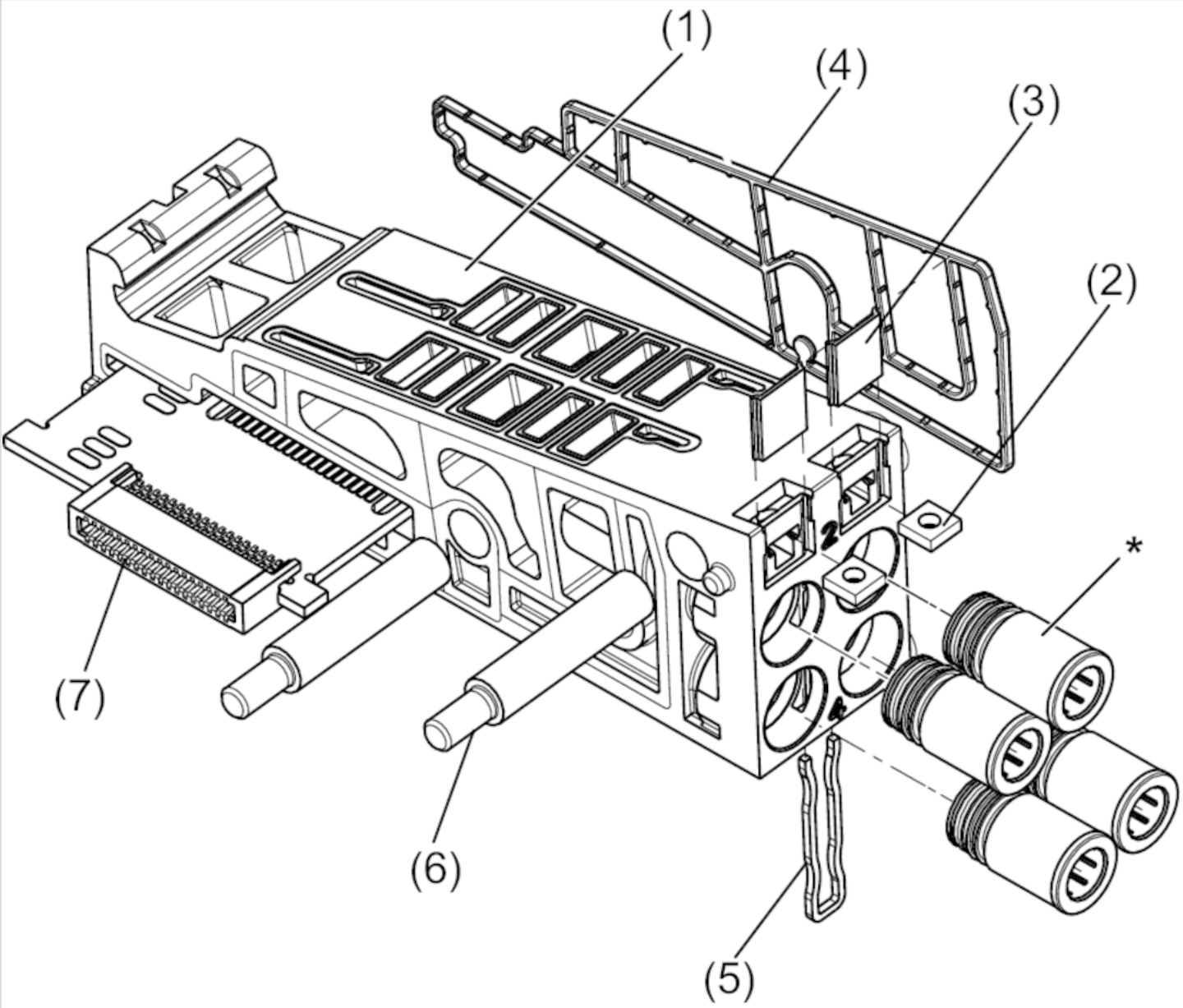

Push-in fittings not included in the scope of delivery.
* For more information on push-in fittings, see the “Push-in fittings” page for the AV series in the catalog.

Extension kit for base plate 3x

- for series AV05

Working pressure min./max.	-0.95 ... 10 bar
Ambient temperature min./max.	-10 ... 60 °C
Medium	Compressed air

Technical data

Part No.	Type
R412020069	Base plate 3x for bus coupler
R412020066	Base plate 3x for single solenoid valves for multipole plug
R412020067	Base plate 3x for double solenoid valves for multipole plug

Part No.	Scope of delivery
R412020069	Base plate (1), incl. 3 nuts (2), 3 labels (3), 1 seal (4), 2 retaining clips (5), 2 tie rod extensions (6), and 1 extension circuit board (7)
R412020066	Base plate (1), incl. 3 nuts (2), 3 labels (3), 1 seal (4), 2 retaining clips (5), 2 tie rod extensions (6), and 1 extension circuit board (7)
R412020067	Base plate (1), incl. 3 nuts (2), 3 labels (3), 1 seal (4), 2 retaining clips (5), 2 tie rod extensions (6), and 1 extension circuit board (7)

Technical information

When using polyurethane tubing, we recommend using additional stiffener sleeves.
For push-in fittings, only use plug accessories made of plastic (polyamide) from our catalog.
After three I/O modules or 8 valves, mount a retaining bracket (R412018339) to fasten the entire unit to the mounting surface.

Technical information

Material	
Housing	Polyamide fiber-glass reinforced
Seals	Nitrile rubber

Dimensions

Overview drawing

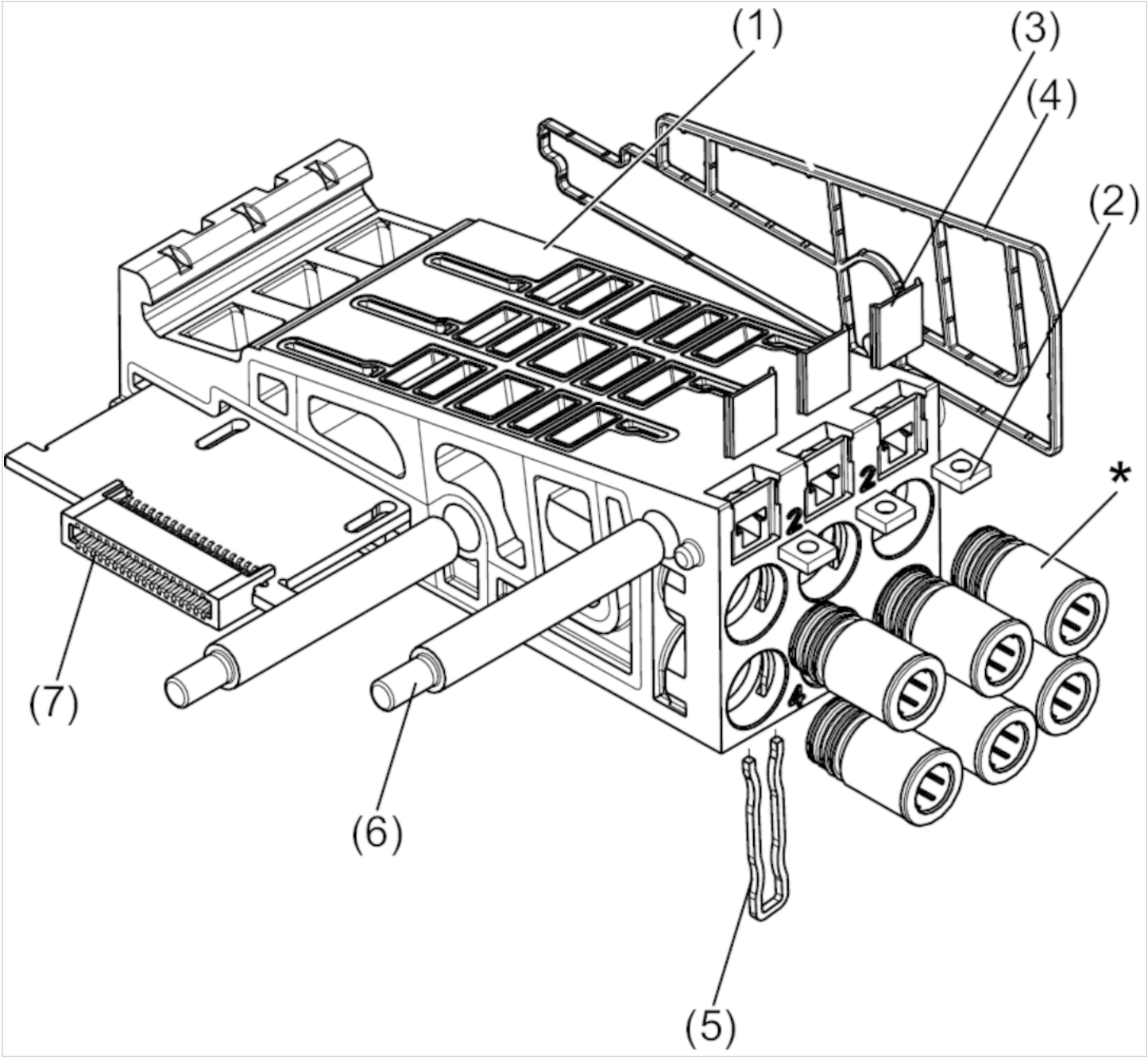

Push-in fittings not included in the scope of delivery.
* For more information on push-in fittings, see the “Push-in fittings” page for the AV series in the catalog.

Extension kit for base plate 4x

- for series AV05

Working pressure min./max.	-0.95 ... 10 bar
Ambient temperature min./max.	-10 ... 60 °C
Medium	Compressed air

Technical data

Part No.	Type
R412022824	Base plate 4x for bus coupler

Part No.	Scope of delivery
R412022824	2 base plates (1), incl. 4 nuts (2), 4 labels (3), 2 seals (4), 2 retaining clips (5), 2 tie rod extensions (6), and 1 extension circuit board (7)

Technical information

After three I/O modules or 8 valves, mount a retaining bracket (R412018339) to fasten the entire unit to the mounting surface.

Technical information

Material	
Housing	Polyamide fiber-glass reinforced
Seals	Nitrile rubber

Dimensions

Overview drawing

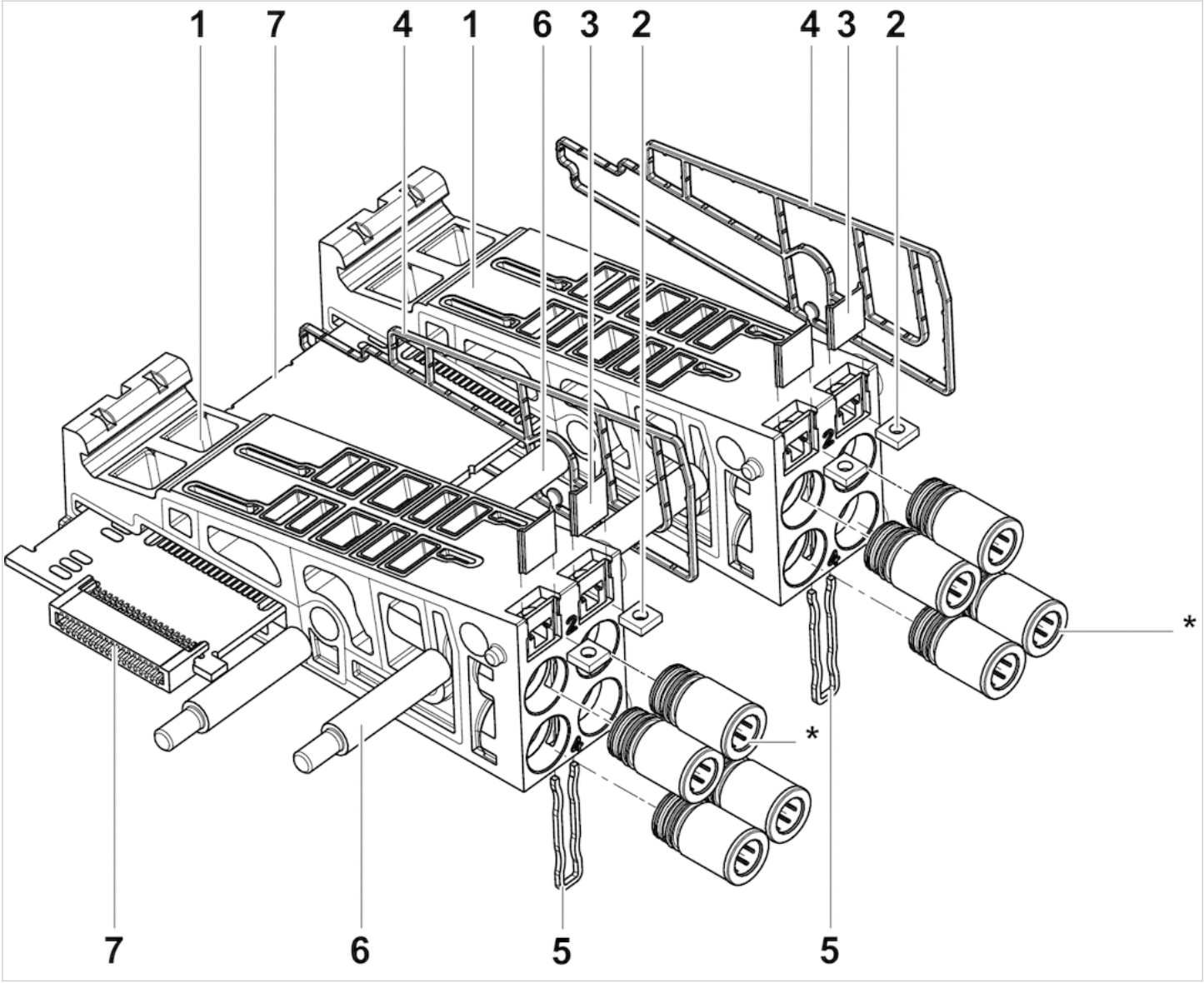

Push-in fittings not included in the scope of delivery.
* For more information on push-in fittings, see the “Push-in fittings” page for the AV series in the catalog.

Extension kit for base plate

- for series AV05-EP

Working pressure min./max.	0 ... 11 bar
Ambient temperature min./max.	-10 ... 60 °C
Medium	Compressed air
Weight	See table below

Technical data

Part No.	Type
R414007182	Base plate for single pressure control for multipole connection
R414007535	Base plate for single pressure control for fieldbus connection
R414007183	Base plate for pressure zone control for multipole connection
R414007536	Base plate for pressure zone control for fieldbus connection

Part No.	Scope of delivery	Weight
R414007182	Base plate (1), incl. 2 nuts (2), 2 labels (3), 1 seal (4), 1 retaining clip (5), 2 tie rod extensions (6), and 1 extension circuit board (7)	0.16 kg
R414007535	Base plate (1), incl. 2 nuts (2), 2 labels (3), 1 seal (4), 1 retaining clip (5), 2 tie rod extensions (6), and 1 extension circuit board (7)	0.162 kg
R414007183	Base plate (1), incl. 2 nuts (2), 2 labels (3), 1 seal (4), 2 tie rod extensions (5), and 1 extension circuit board (6)	0.151 kg
R414007536	Base plate (1), incl. 2 nuts (2), 2 labels (3), 1 seal (4), 2 tie rod extensions (5), and 1 extension circuit board (6)	0.153 kg

Technical information

The base plate can only be used in conjunction with an AV05-EP. Depending on the selected base plate, you can either use the pressure regulator as a pressure zone control or single pressure control
When using polyurethane tubing, we recommend using additional stiffener sleeves.
For push-in fittings, only use plug accessories made of plastic (polyamide) from our catalog.
After three I/O modules or 8 valves, mount a retaining bracket (R412018339) to fasten the entire unit to the mounting surface.

Technical information

Material	
Housing	Polyamide
Seals	Nitrile butadiene rubber

Dimensions

Dimensions, Single pressure control

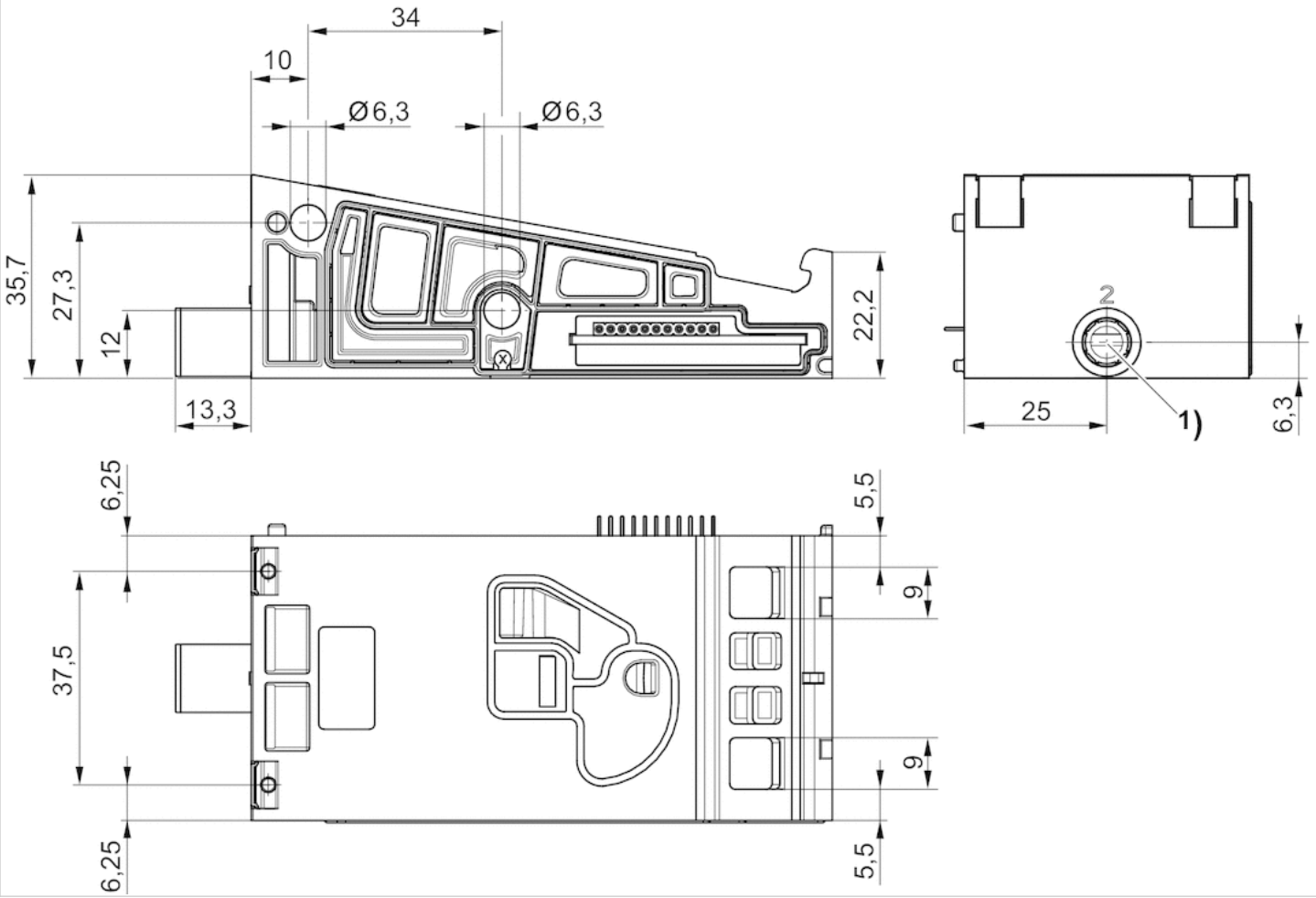

Dimensions

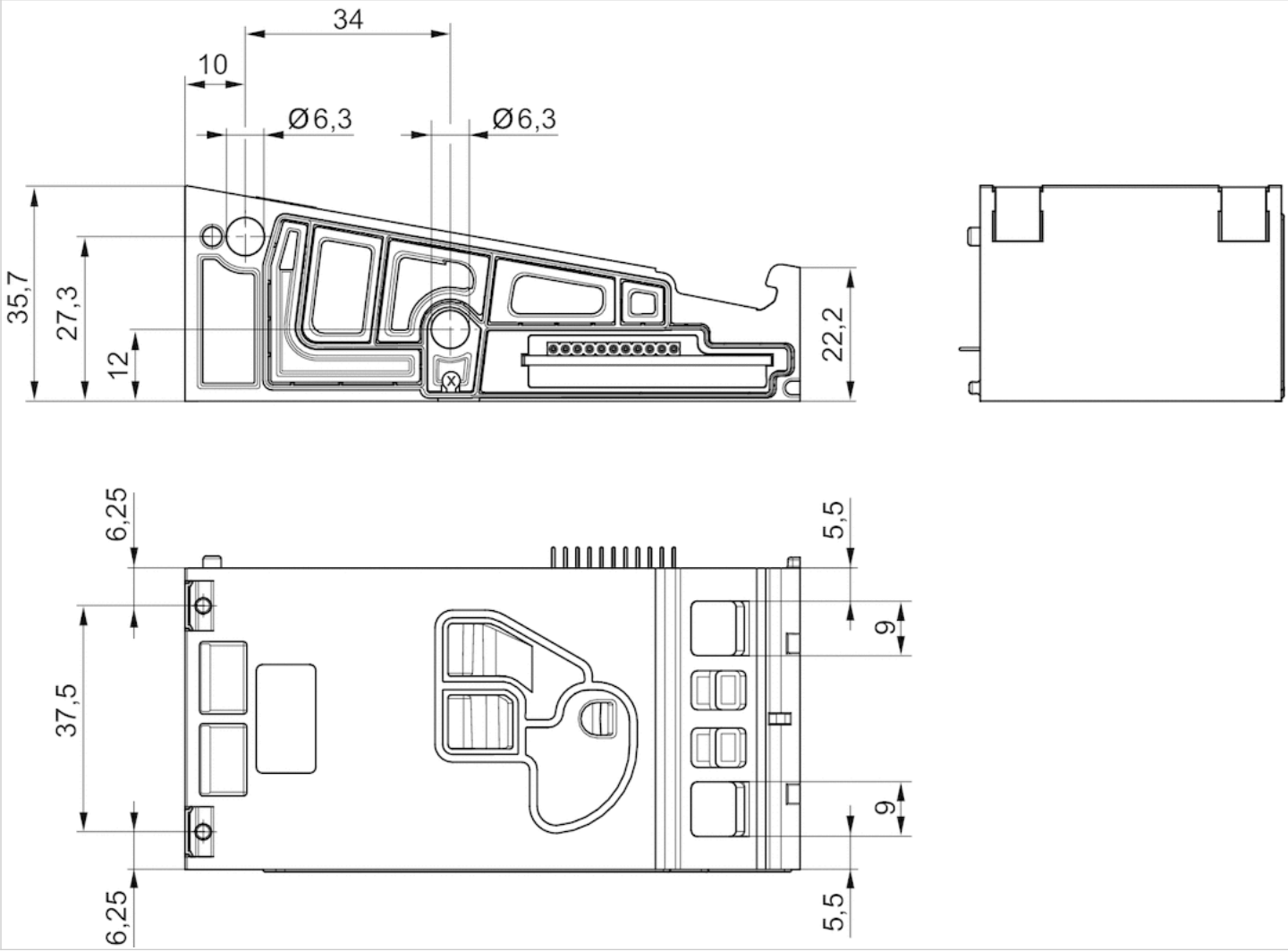

Overview drawing, Single pressure control

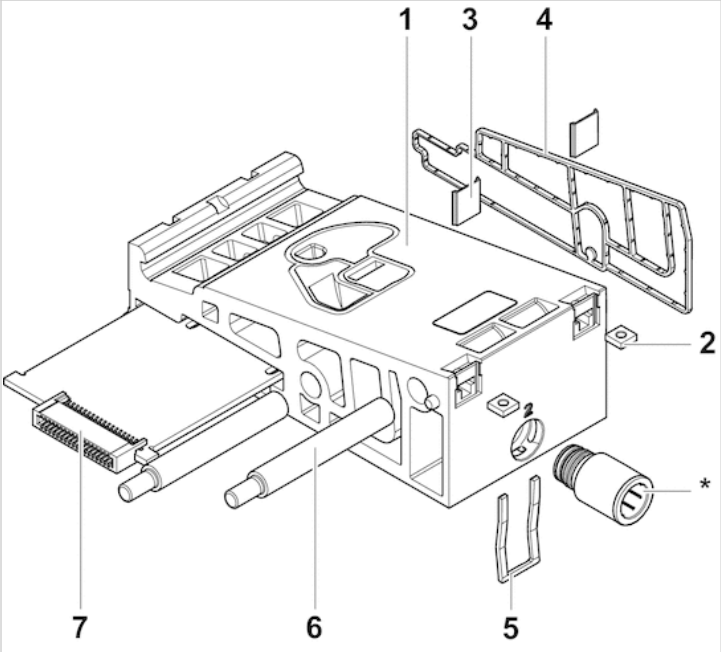

* Push-in fittings not included in the scope of delivery.
* For more information on push-in fittings, see the “Push-in fittings” page in the catalog.

Overview drawing, Pressure zone control

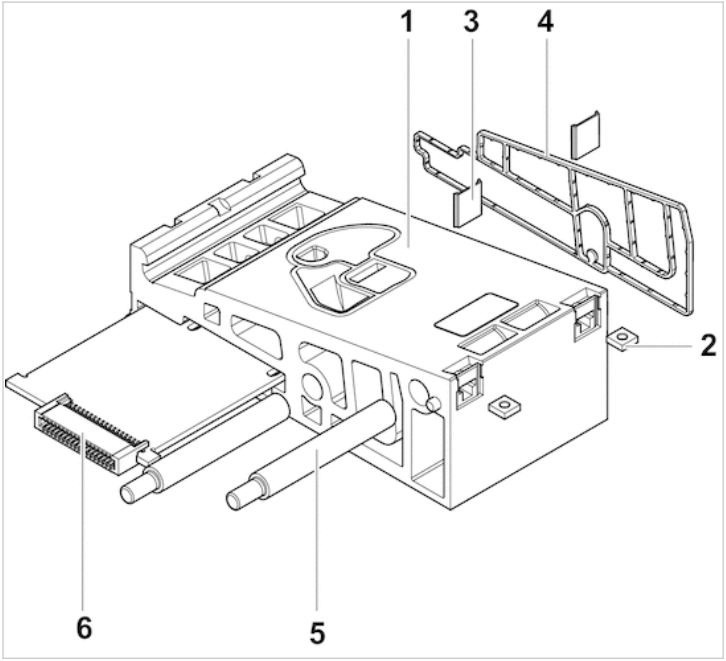

Extension kit, supply plate

- for series AV05

Working pressure min./max.	-0.95 ... 10 bar
Ambient temperature min./max.	-10 ... 60 °C
Medium	Compressed air

Technical data

Part No.		Valve system version	Position
R412020070		Fieldbus	1
R412022579		Multipole	1
R412020071		Fieldbus	1
R412022580		Multipole	1
R412020072		Fieldbus	1
R412022581		Multipole	1
R412020073		Fieldbus	1
R412022582		Multipole	1
R412023849		Fieldbus	1
R412023847		Multipole	1
R412023851		Fieldbus	1
R412023848		Multipole	1

Part No.	Type
R412020070	Supply plate, connection 1, no pressure zones
R412022579	Supply plate, connection 1, no pressure zones
R412020071	Supply plate, connection 1, separate pressure zones in channels 1/3/5
R412022580	Supply plate, connection 1, separate pressure zones in channels 1/3/5
R412020072	Supply plate, connection 1, separate pressure zone in channel 1
R412022581	Supply plate, connection 1, separate pressure zone in channel 1
R412020073	Supply plate, connection 1, separate pressure zones in channels 3/5
R412022582	Supply plate, connection 1, separate pressure zones in channels 3/5
R412023849	Supply plate, connection 1, internal pilot, separate pressure zones in channels 1/3/5/X

Part No.	Type
R412023847	Supply plate, connection 1, internal pilot, separate pressure zones in channels 1/3/5/X
R412023851	Supply plate, connection 1, external pilot, separate pressure zones in channels 1/3/5/X
R412023848	Supply plate, connection 1, external pilot, separate pressure zones in channels 1/3/5/X

Part No.	Scope of delivery	Fig.
R412020070	Base plate, incl. 1 nut, 2 seals, 1 retaining clip, 2 screws, 2 tie rod extensions, 1 push-in fitting Ø 12 mm, straight, and 1 extension circuit board	Fig. 1
R412022579	Base plate, incl. 1 nut, 2 seals, 1 retaining clip, 2 screws, 2 tie rod extensions, 1 push-in fitting Ø 12 mm, straight, and 1 extension circuit board	Fig. 1
R412020071	Base plate, incl. 1 nut, 2 seals, 1 retaining clip, 2 screws, 2 tie rod extensions, 1 push-in fitting Ø 12 mm, straight, and 1 extension circuit board	Fig. 1
R412022580	Base plate, incl. 1 nut, 2 seals, 1 retaining clip, 2 screws, 2 tie rod extensions, 1 push-in fitting Ø 12 mm, straight, and 1 extension circuit board	Fig. 1
R412020072	Base plate, incl. 1 nut, 2 seals, 1 retaining clip, 2 screws, 2 tie rod extensions, 1 push-in fitting Ø 12 mm, straight, and 1 extension circuit board	Fig. 1
R412022581	Base plate, incl. 1 nut, 2 seals, 1 retaining clip, 2 screws, 2 tie rod extensions, 1 push-in fitting Ø 12 mm, straight, and 1 extension circuit board	Fig. 1
R412020073	Base plate, incl. 1 nut, 2 seals, 1 retaining clip, 2 screws, 2 tie rod extensions, 1 push-in fitting Ø 12 mm, straight, and 1 extension circuit board	Fig. 1

Part No.	Scope of delivery	Fig.
R412022582	Base plate, incl. 1 nut, 2 seals, 1 retaining clip, 2 screws, 2 tie rod extensions, 1 push-in fitting Ø 12 mm, straight, and 1 extension circuit board	Fig. 1
R412023849	Base plate, incl. 1 nut, 2 seals, 1 retaining clip, 2 screws, 2 tie rod extensions, 1 push-in fitting Ø 12 mm, straight, and 1 extension circuit board	Fig. 1
R412023847	Base plate, incl. 1 nut, 2 seals, 1 retaining clip, 2 screws, 2 tie rod extensions, 1 push-in fitting Ø 12 mm, straight, and 1 extension circuit board	Fig. 1
R412023851	Base plate, incl. 1 nut, 2 seals, 1 retaining clip, 2 screws, 2 tie rod extensions, 1 push-in fitting Ø 12 mm, straight, and 1 extension circuit board	Fig. 2
R412023848	Base plate, incl. 1 nut, 2 seals, 1 retaining clip, 2 screws, 2 tie rod extensions, 1 push-in fitting Ø 12 mm, straight, and 1 extension circuit board	Fig. 2

Technical information

When using polyurethane tubing, we recommend using additional stiffener sleeves.
For push-in fittings, only use plug accessories made of plastic (polyamide) from our catalog.
The exhaust module (item 2) is not included in the scope of delivery for the supply plate (item 1). You must order the exhaust modules separately.

Technical information

Material	
Seals	Nitrile rubber

Dimensions

Fig. 1

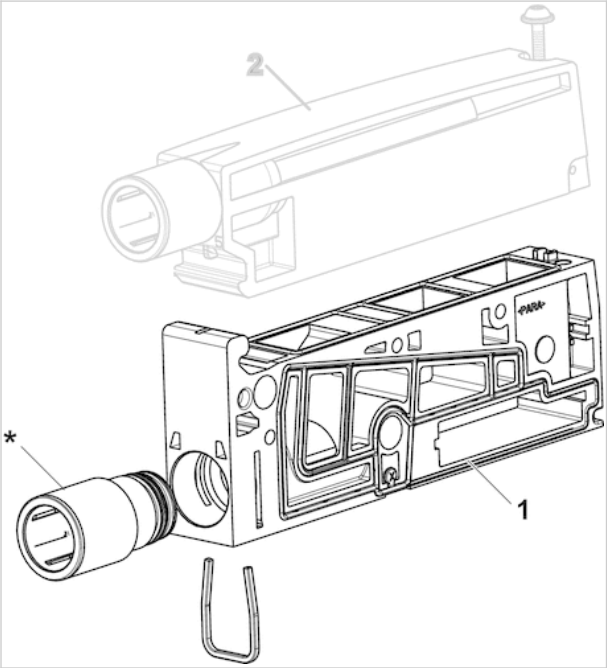

material: housing: Polyamide, fiber-glass reinforced
* For more information on push-in fittings, see the “Push-in fittings” page for the AV series in the catalog.

Fig. 2

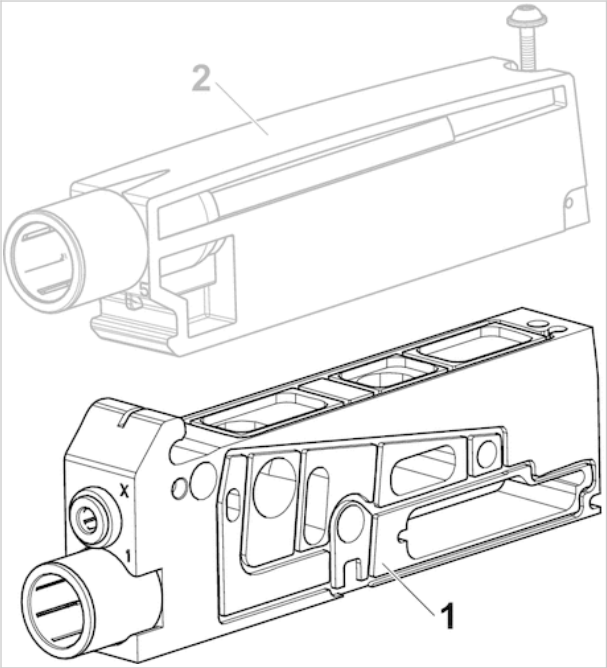

material housing: aluminum

Fig. 3

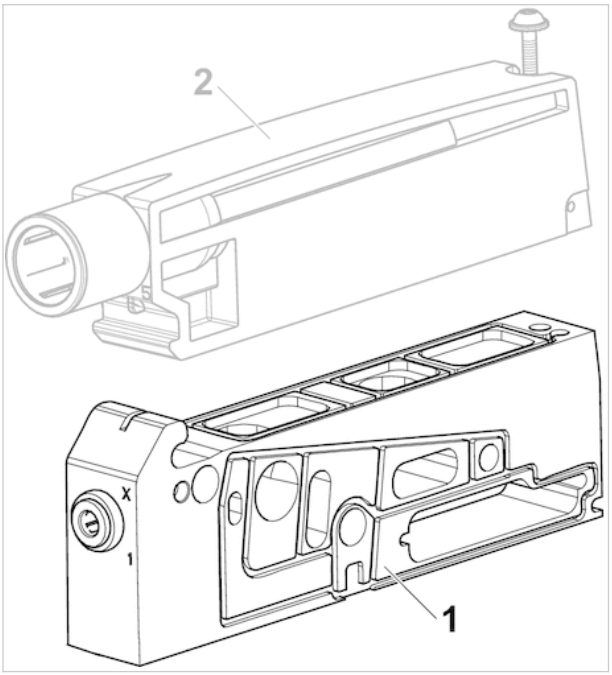

material housing: aluminum

Extension kit, supply plate with switch-off voltage monitoring

- for series AV05

Working pressure min./max.	-0.95 ... 10 bar
Ambient temperature min./max.	-10 ... 60 °C
Medium	Compressed air
Max. particle size	40 µm
Oil content of compressed air	0 ... 5 mg/m³

Technical data

Part No.		Valve system version
R412025072		Fieldbus
R412025073		Fieldbus
R412025074		Fieldbus
R412025075		Fieldbus
R412025076		Fieldbus
R412025077		Fieldbus

Part No.	Type
R412025072	Supply plate, connection 1, internal pilot, separate pressure zones in channels 1/3/5/X
R412025073	Supply plate, connection 1, external pilot, separate pressure zones in channels 1/3/5/X
R412025074	Supply plate, connection 1, no pressure zones
R412025075	Supply plate, connection 1, separate pressure zones in channels 1/3/5
R412025076	Supply plate, connection 1, separate pressure zone in channel 1
R412025077	Supply plate, connection 1, separate pressure zones in channels 3/5

Part No.	Housing material
R412025072	Polyarylamide, fiber-glass reinforced
R412025073	Aluminum
R412025074	Polyarylamide, fiber-glass reinforced
R412025075	Polyarylamide, fiber-glass reinforced
R412025076	Polyarylamide, fiber-glass reinforced
R412025077	Polyarylamide, fiber-glass reinforced

Part No.	Scope of delivery
R412025072	Base plate, incl. 1 nut, 2 seals, 1 retaining clip, 2 screws, 2 tie rod extensions, 1 push-in fitting Ø 12 mm, straight, and 1 extension circuit board
R412025073	Base plate, incl. 1 nut, 2 seals, 1 retaining clip, 2 screws, 2 tie rod extensions, 1 push-in fitting Ø 12 mm, straight, and 1 extension circuit board
R412025074	Base plate, incl. 1 nut, 2 seals, 1 retaining clip, 2 screws, 2 tie rod extensions, 1 push-in fitting Ø 12 mm, straight, and 1 extension circuit board
R412025075	Base plate, incl. 1 nut, 2 seals, 1 retaining clip, 2 screws, 2 tie rod extensions, 1 push-in fitting Ø 12 mm, straight, and 1 extension circuit board
R412025076	Base plate, incl. 1 nut, 2 seals, 1 retaining clip, 2 screws, 2 tie rod extensions, 1 push-in fitting Ø 12 mm, straight, and 1 extension circuit board
R412025077	Base plate, incl. 1 nut, 2 seals, 1 retaining clip, 2 screws, 2 tie rod extensions, 1 push-in fitting Ø 12 mm, straight, and 1 extension circuit board

You must order the exhaust modules separately.

Technical information

The supply plates with switch-off voltage monitoring are equipped with electronics that monitor if the voltage falls safely below the switch-off voltage threshold. The supply plate must be positioned to the left of the valves to be monitored.
The supply plates can only be used in conjunction with an AV valve system with fieldbus connection.
When using polyurethane tubing, we recommend using additional stiffener sleeves.
For push-in fittings, only use plug accessories made of plastic (polyamide) from our catalog.

Technical information

Material	
Housing	Polyarylamide, fiber-glass reinforced Aluminum
Seals	Nitrile rubber

Dimensions

Dimensions

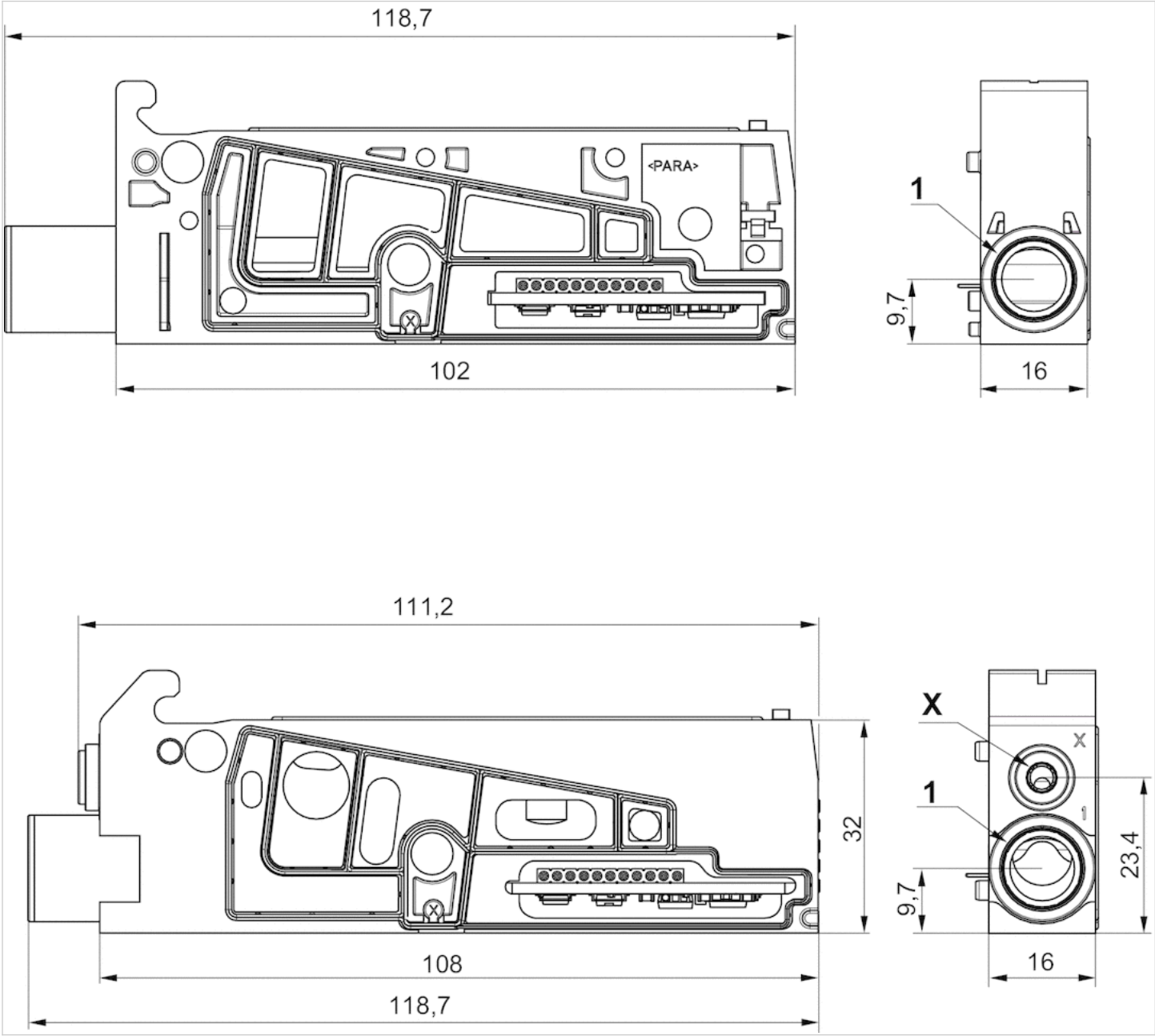

1) Push-in connector, Ø 12 mm
X) Push-in connector Ø 4 mm, straight 5/32
For more information on push-in fittings, see the “Push-in fittings” page for the AV series in the catalog.

Extension kit, electrical supply plate

R412021778

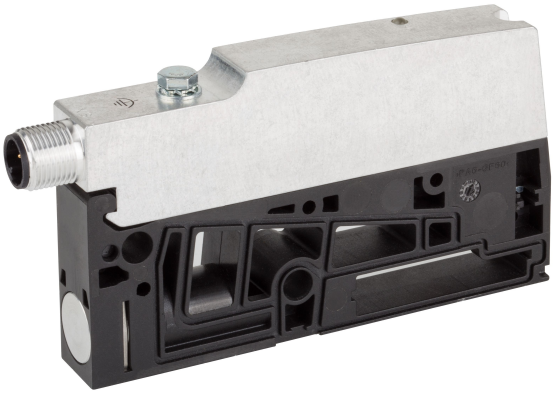

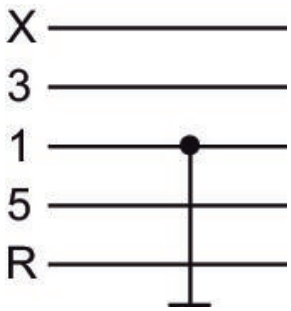

Technical data

Industry	Industrial
Type	Assembly kit
For series	AV05 AES
DC operating voltage	24 V
Voltage tolerance DC	-10% / +10%
Scope of delivery	Supply plate, incl. 1 seal, 2 tie rods, and 2 screws for extension
Min. ambient temperature	-10 °C
Max. ambient temperature	60 °C
Min. medium temperature	-10 °C

Max. medium temperature	60 °C
Electrical connection	M12
Electrical connection	4-pin
Electrical connection	A-coded
Max. current consumption	2 A
Protection class	IP65
Weight	0.157 kg

Material

Housing material	Polyamide Aluminum
Seal material	Nitrile rubber
Part No.	R412021778

Technical information

When using polyurethane tubing, we recommend using additional stiffener sleeves.

For push-in fittings, only use plug accessories made of plastic (polyamide) from our catalog.

Please note that the supply plate may only be used in conjunction with AES series fieldbus modules.

The min. control pressure must be adhered to, since otherwise faulty switching and valve failure may result!

The pressure dew point must be at least 15 °C less than ambient and medium temperature and may not exceed 3 °C.

The oil content of compressed air must remain constant during the life cycle.

Use only the approved oils from AVENTICS. Further information can be found in the “Technical information” document (available in https://www.emerson.com/en-us/support).

Dimensions

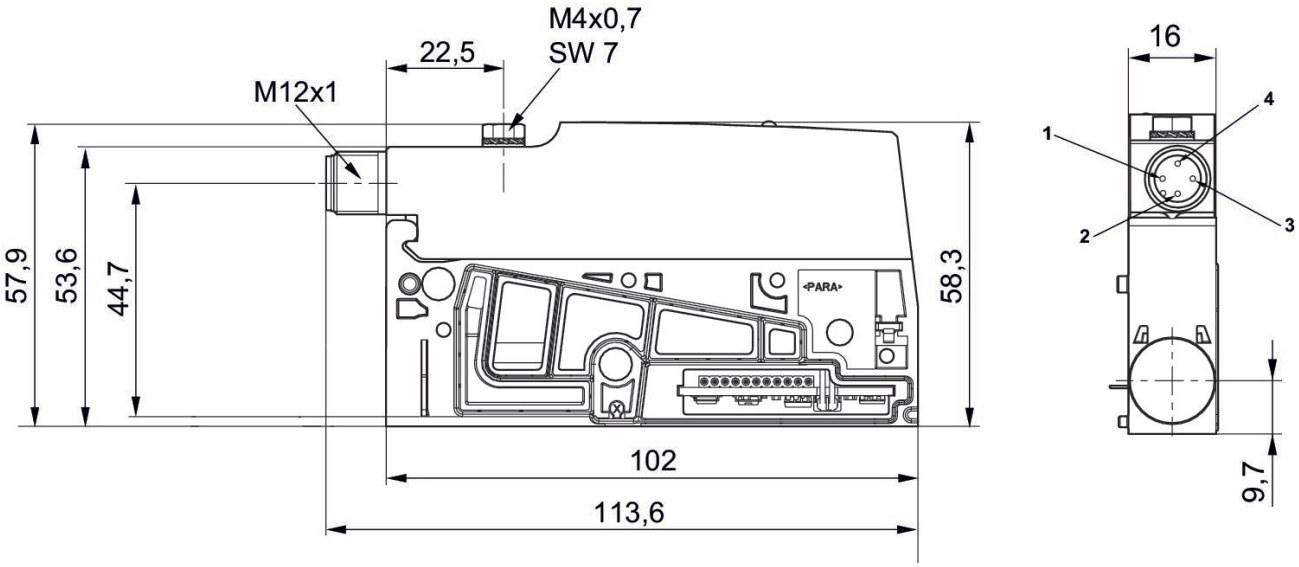

Pin assignment: 1 = (-), 2 = (24 V DC), 3 = (-), 4 = (0 V DC)

Plug (male)

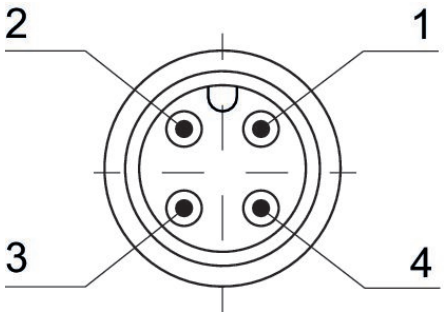

Pin	Plug X1S
1	not assigned
2	24 V DC
3	not assigned
4	0 V DC (UA)

Extension kit, Electrical valve control module

- for AV05

Ambient temperature min./max.	-10 ... 60 °C
Medium temperature min./max.	-10 ... 60 °C
Max. power consumption	1 A
Protection class	IP65
Weight	0.16 kg

Technical data

Part No.	Scope of delivery
R412022744	M12 control module (incl. base plate for 2 valve positions incl. 2 nuts, 2 labels), 2 tie rod extensions 16 mm, 2 tie rod extensions 25 mm, 2 retaining clips, and 2 seals

Part No.	electrical connections	DC operating voltage	Voltage tolerance AC 50 Hz
R412022744	M12, 5-pin, A-coded	24 V	-10% / +10%

Push-in fittings are not included in the scope of delivery and must be ordered separately.

Technical information

The min. control pressure must be adhered to, since otherwise faulty switching and valve failure may result!
The pressure dew point must be at least 15 °C under ambient and medium temperature and may not exceed 3 °C .
The oil content of compressed air must remain constant during the life cycle.
Use only the approved oils from AVENTICS. Further information can be found in the “Technical information” document (available in the MediaCentre).

When using polyurethane tubing, we recommend using additional stiffener sleeves.
For push-in fittings, only use plug accessories made of plastic (polyamide) from our catalog.

Technical information

Material	
Housing	Polyamide Aluminum
Seal	Nitrile rubber

Dimensions

Dimensions

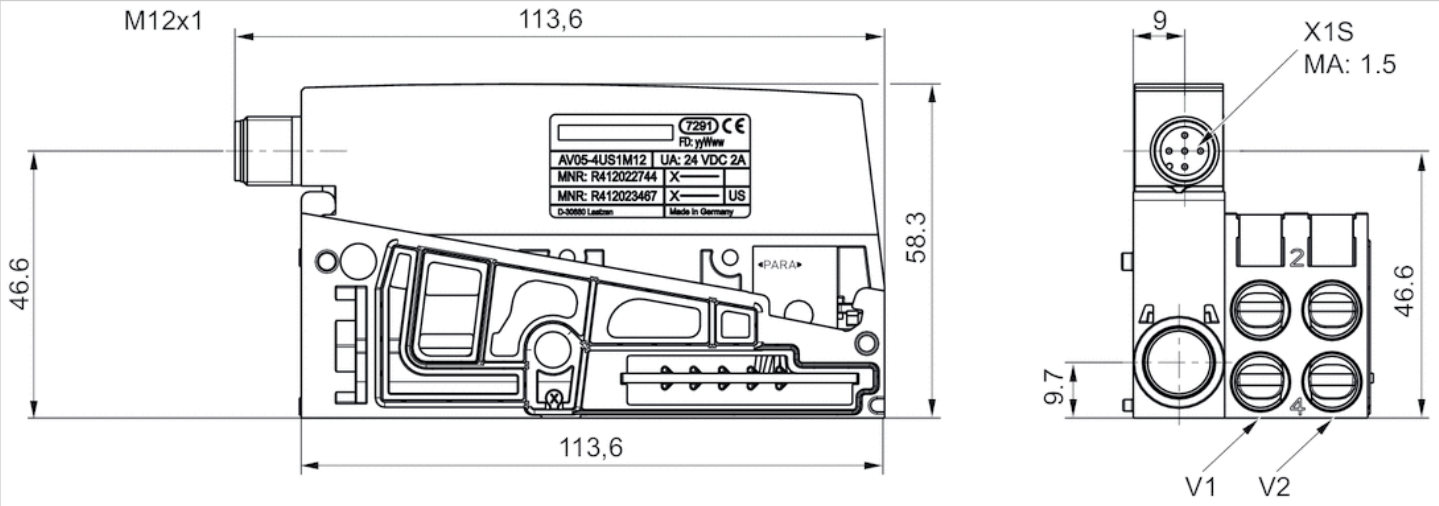

Pin assignments

Plug pin assignment

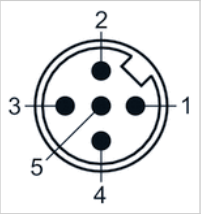

(1) BN=brown
(2) WH=white
3) BU=blue
(4) BK=black
(5) GY=grey

Pin	1	2	3	4	5
Valve	V1	V1	GND	V2	V2
Coil	14	12	GND	14	12

Extension kit, combination plate, Series AV

R412021780

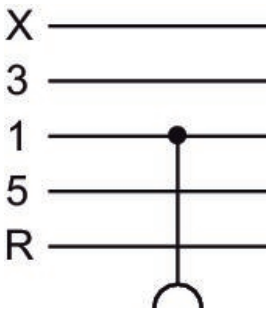

Technical data

Industry
Industrial

Type
Base plate

Type
Supply plate, connection 1, no pressure zones

Compressed air connection input
Ø 12

Pilot connection
Ø 12

Valve system version
Fieldbus

Scope of delivery
Combination module, right end plate AV05, screws, and seal

Working pressure min.
-0.95 bar

Working pressure max
10 bar

Min. ambient temperature
-10 °C

Max. ambient temperature
60 °C

Medium
Compressed air

Material

Housing material
Aluminum

Seal material
Nitrile rubber

Part No.
R412021780

Technical information

When using polyurethane tubing, we recommend using additional stiffener sleeves.

For push-in fittings, only use plug accessories made of plastic (polyamide) from our catalog.

The min. control pressure must be adhered to, since otherwise faulty switching and valve failure may result!

The pressure dew point must be at least 15 °C under ambient and medium temperature and may not exceed 3 °C .

The oil content of compressed air must remain constant during the life cycle.

Use only the approved oils from AVENTICS. Further information can be found in the “Technical information” document (available in https://www.emerson.com/en-us/support).

Dimensions

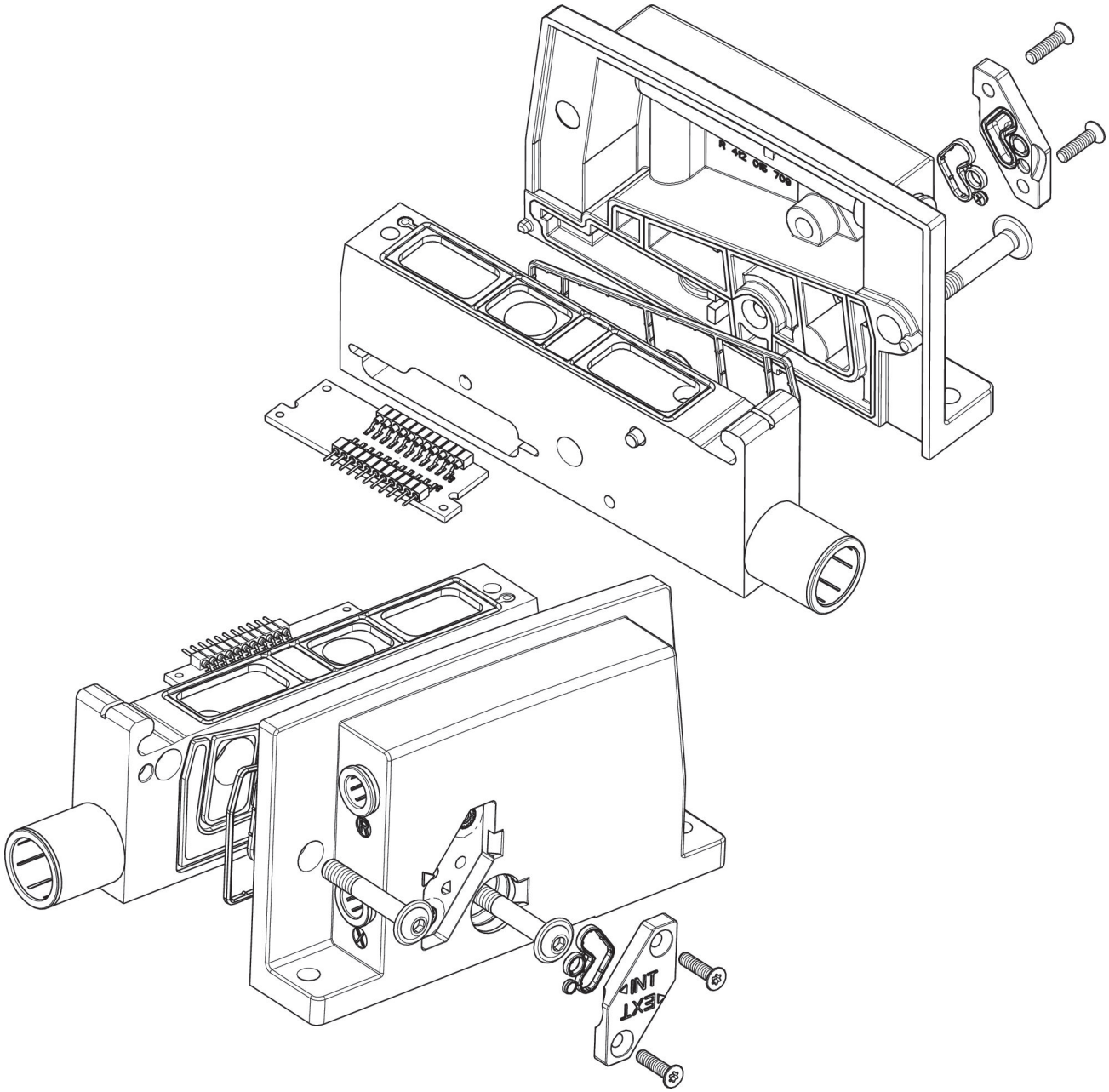

Extension kit, combination plate, Series AV

R412022594

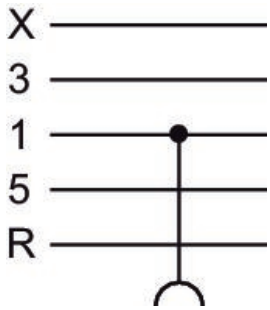

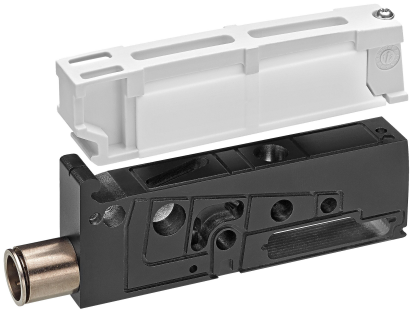

Technical data

Industry
Industrial

Type
Base plate

Type
Supply plate, connection 1, no pressure zones

Compressed air connection input
Ø 3/8″

Pilot connection
Ø 3/8″

Valve system version
Fieldbus

Scope of delivery
Combination module, right end plate AV05, screws, and seal

Working pressure min.
-0.95 bar

Working pressure max
10 bar

Min. ambient temperature
-10 °C

Max. ambient temperature
60 °C

Medium
Compressed air

Material

Housing material
Aluminum

Seal material
Nitrile rubber

Part No.
R412022594

Technical information

When using polyurethane tubing, we recommend using additional stiffener sleeves.

For push-in fittings, only use plug accessories made of plastic (polyamide) from our catalog.

The min. control pressure must be adhered to, since otherwise faulty switching and valve failure may result!

The pressure dew point must be at least 15 °C under ambient and medium temperature and may not exceed 3 °C .

The oil content of compressed air must remain constant during the life cycle.

Use only the approved oils from AVENTICS. Further information can be found in the “Technical information” document (available in https://www.emerson.com/en-us/support).

Dimensions

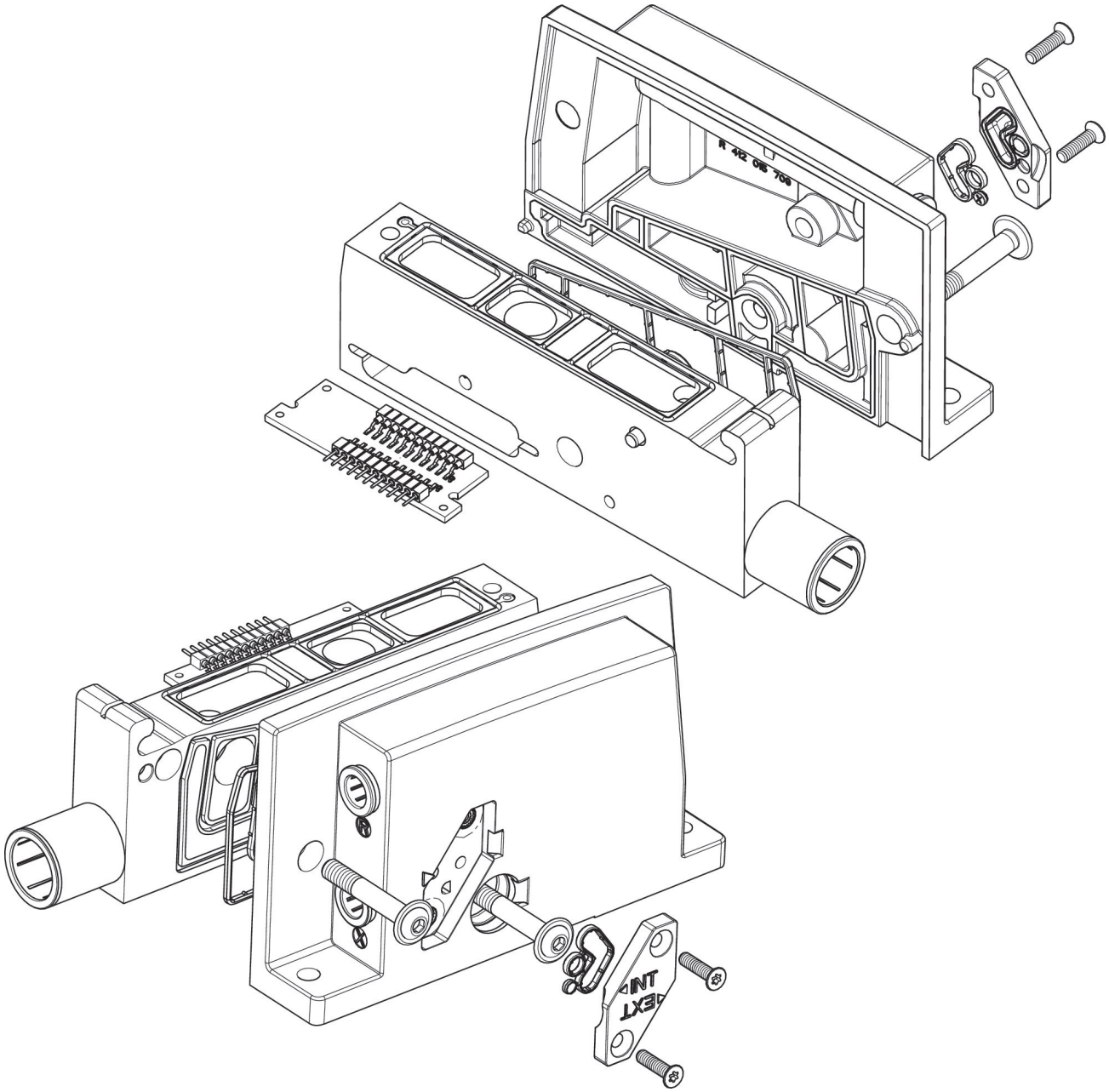

Extension kit, combination plate, Series AV

R412021777

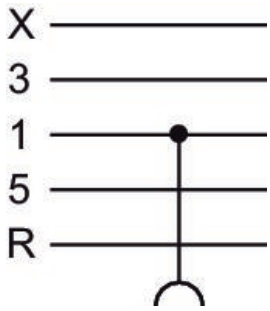

Technical data

Industry
Industrial

Type
Base plate

Type
Supply plate, connection 1, no pressure zones

Compressed air connection input
Ø 12

Pilot connection
Ø 12

Valve system version
Multipole

Scope of delivery
Combination module, right end plate AV05, screws, and seal

Working pressure min.
-0.95 bar

Working pressure max
10 bar

Min. ambient temperature
-10 °C

Max. ambient temperature
60 °C

Medium
Compressed air

Material

Housing material
Aluminum

Seal material
Nitrile rubber

Part No.
R412021777

Technical information

When using polyurethane tubing, we recommend using additional stiffener sleeves.

For push-in fittings, only use plug accessories made of plastic (polyamide) from our catalog.

The min. control pressure must be adhered to, since otherwise faulty switching and valve failure may result!

The pressure dew point must be at least 15 °C under ambient and medium temperature and may not exceed 3 °C .

The oil content of compressed air must remain constant during the life cycle.

Use only the approved oils from AVENTICS. Further information can be found in the “Technical information” document (available in https://www.emerson.com/en-us/support).

Dimensions

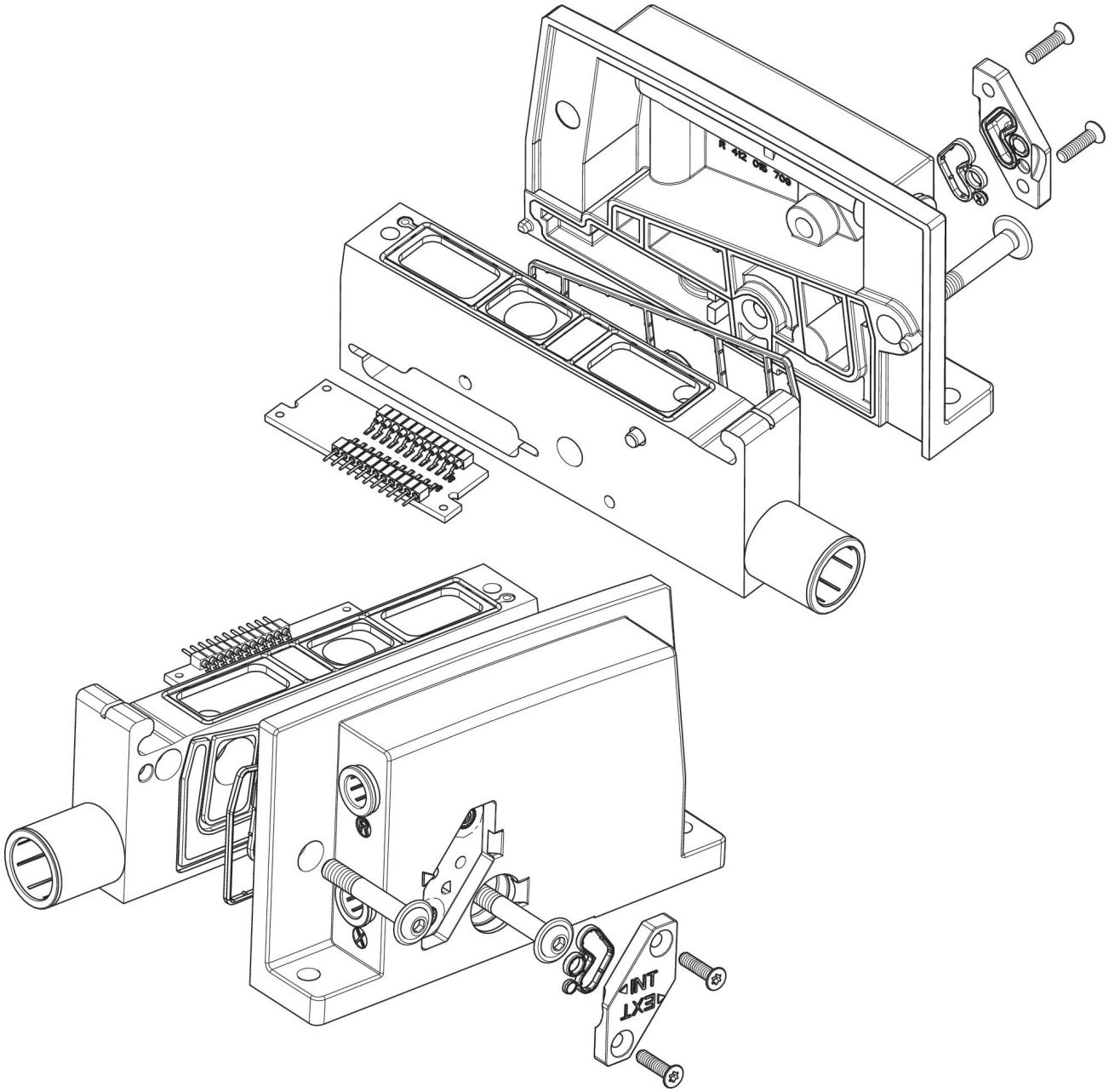

Extension kit, combination plate, Series AV

R412022592

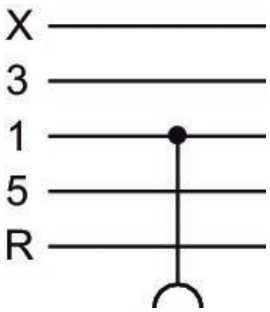

Technical data

Industry
Industrial

Type
Base plate

Type
Supply plate, connection 1, no pressure zones

Compressed air connection input
Ø 3/8″

Pilot connection
Ø 3/8″

Valve system version
Multipole

Scope of delivery
Combination module, right end plate AV05, screws, and seal

Working pressure min.
-0.95 bar

Working pressure max
10 bar

Min. ambient temperature
-10 °C

Max. ambient temperature
60 °C

Medium
Compressed air

Material

Housing material
Aluminum

Seal material
Nitrile rubber

Part No.
R412022592

Technical information

When using polyurethane tubing, we recommend using additional stiffener sleeves.

For push-in fittings, only use plug accessories made of plastic (polyamide) from our catalog.

The min. control pressure must be adhered to, since otherwise faulty switching and valve failure may result!

The pressure dew point must be at least 15 °C under ambient and medium temperature and may not exceed 3 °C .

The oil content of compressed air must remain constant during the life cycle.

Use only the approved oils from AVENTICS. Further information can be found in the “Technical information” document (available in https://www.emerson.com/en-us/support).

Dimensions

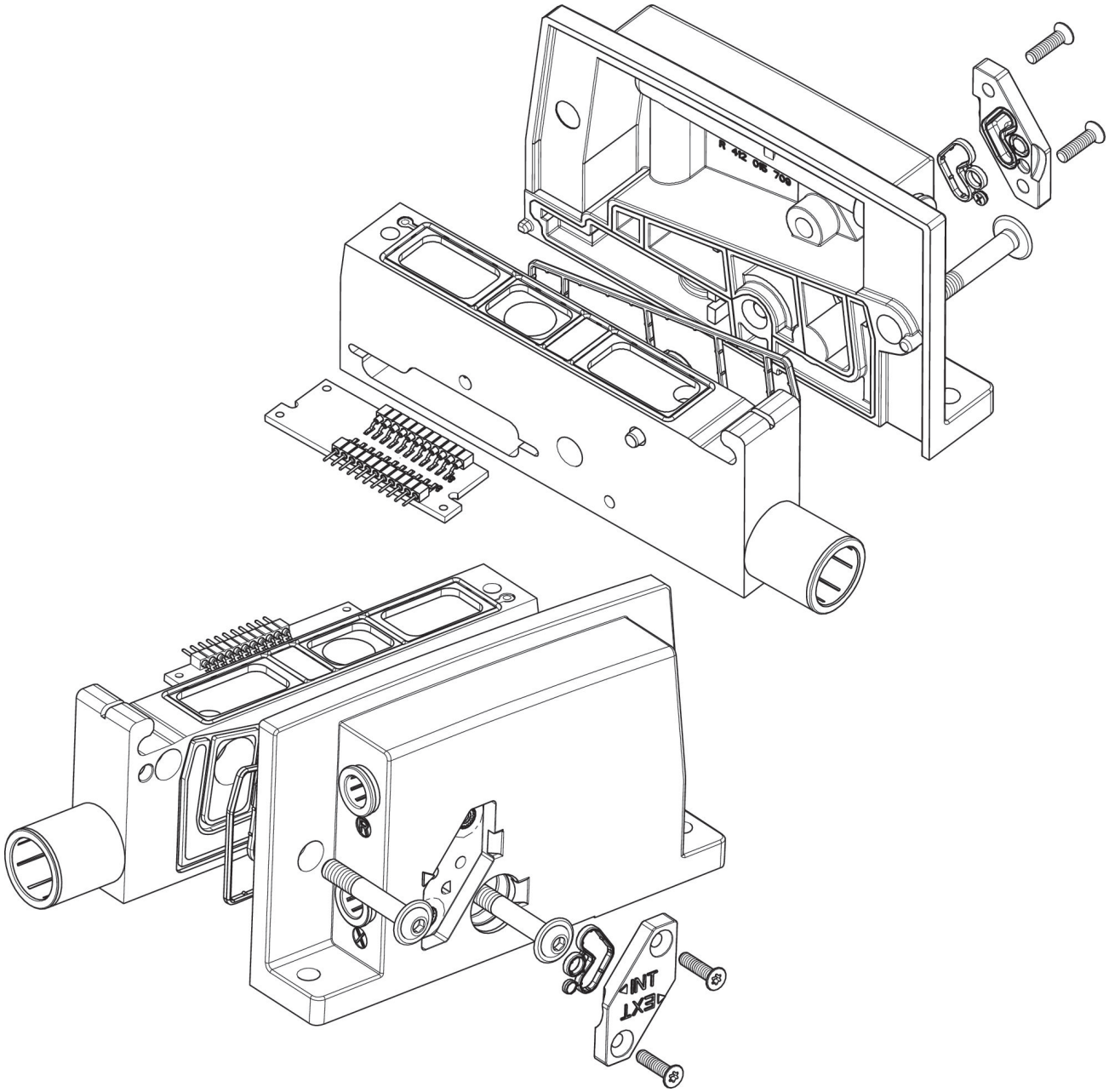

Extension kit, combination plate, Series AV

R412021779

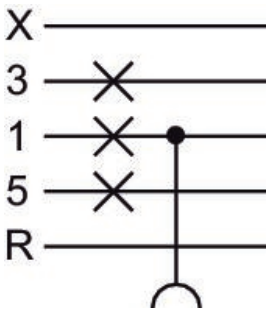

Technical data

Industry
Industrial

Type
Base plate

Type
Supply plate, connection 1, separate pressure zones in channels 1/3/5

Compressed air connection input
Ø 12

Pilot connection
Ø 12

Valve system version
Fieldbus

Scope of delivery
Combination module, right end plate AV05, screws, and seal

Working pressure min.
-0.95 bar

Working pressure max
10 bar

Min. ambient temperature
-10 °C

Max. ambient temperature
60 °C

Medium
Compressed air

Material

Housing material
Aluminum

Seal material
Nitrile rubber

Part No.
R412021779

Technical information

When using polyurethane tubing, we recommend using additional stiffener sleeves.

For push-in fittings, only use plug accessories made of plastic (polyamide) from our catalog.

The min. control pressure must be adhered to, since otherwise faulty switching and valve failure may result!

The pressure dew point must be at least 15 °C under ambient and medium temperature and may not exceed 3 °C .

The oil content of compressed air must remain constant during the life cycle.

Use only the approved oils from AVENTICS. Further information can be found in the “Technical information” document (available in https://www.emerson.com/en-us/support).

Dimensions

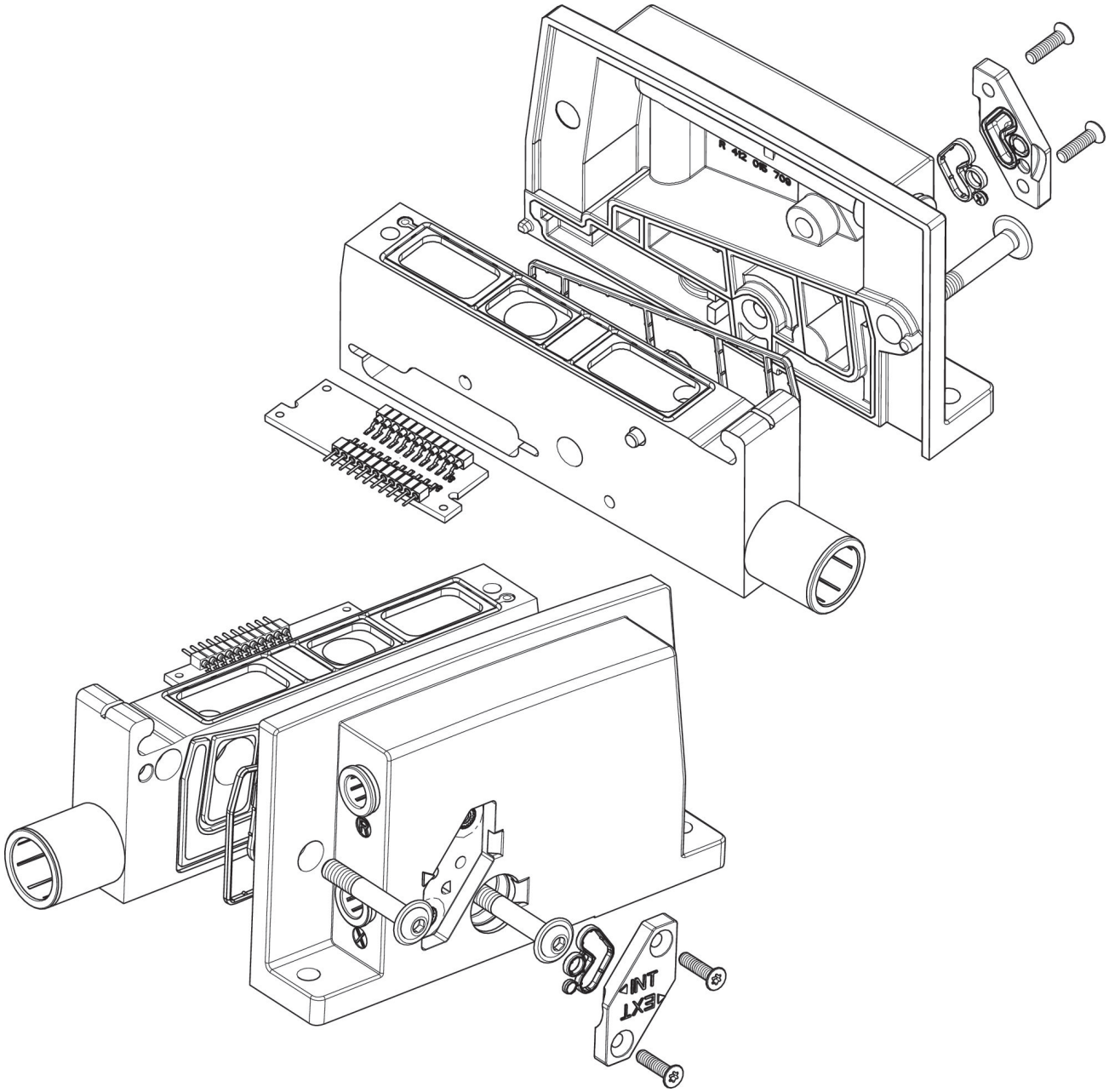

Extension kit, combination plate, Series AV

R412022593

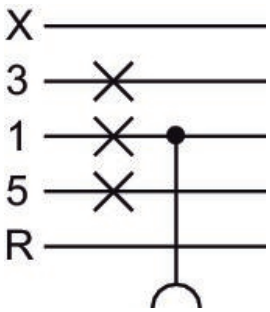

Technical data

Industry
Industrial

Type
Base plate

Type
Supply plate, connection 1, separate pressure zones in channels 1/3/5

Compressed air connection input
Ø 3/8″

Pilot connection
Ø 3/8″

Valve system version
Fieldbus

Scope of delivery
Combination module, right end plate AV05, screws, and seal

Working pressure min.
-0.95 bar

Working pressure max
10 bar

Min. ambient temperature
-10 °C

Max. ambient temperature
60 °C

Medium
Compressed air

Material

Housing material
Aluminum

Seal material
Nitrile rubber

Part No.
R412022593

Technical information

When using polyurethane tubing, we recommend using additional stiffener sleeves.

For push-in fittings, only use plug accessories made of plastic (polyamide) from our catalog.

The min. control pressure must be adhered to, since otherwise faulty switching and valve failure may result!

The pressure dew point must be at least 15 °C under ambient and medium temperature and may not exceed 3 °C .

The oil content of compressed air must remain constant during the life cycle.

Use only the approved oils from AVENTICS. Further information can be found in the “Technical information” document (available in https://www.emerson.com/en-us/support).

Dimensions

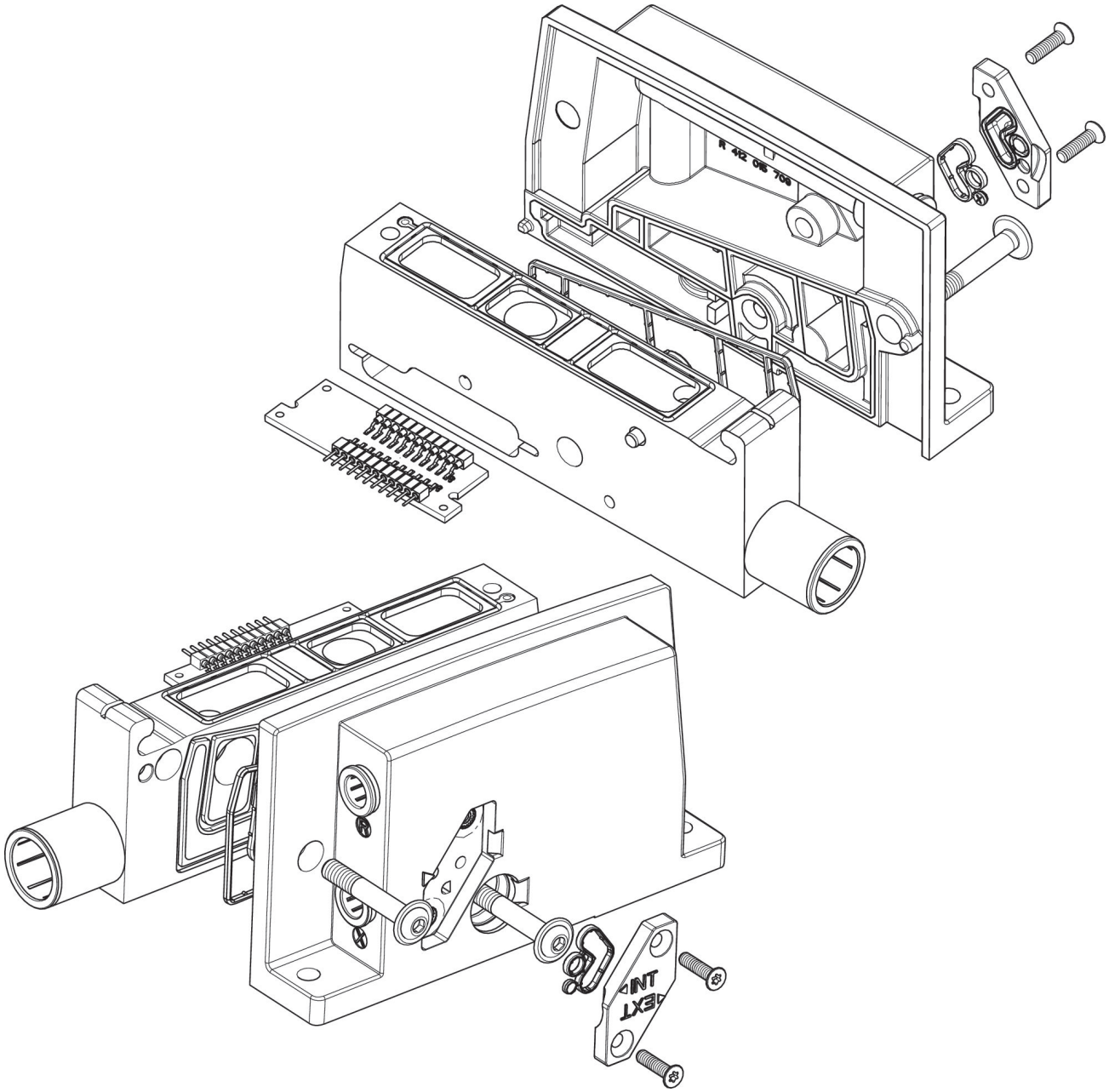

Extension kit, combination plate, Series AV

R412021776

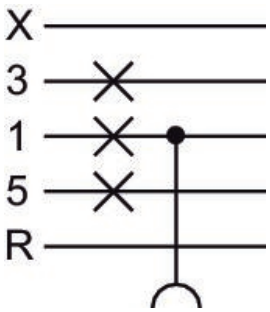

Technical data

Industry
Industrial

Type
Base plate

Type
Supply plate, connection 1, separate pressure zones in channels 1/3/5

Compressed air connection input
Ø 12

Pilot connection
Ø 12

Valve system version
Multipole

Scope of delivery
Combination module, right end plate AV05, screws, and seal

Working pressure min.
-0.95 bar

Working pressure max
10 bar

Min. ambient temperature
-10 °C

Max. ambient temperature
60 °C

Medium
Compressed air

Material

Housing material
Aluminum

Seal material
Nitrile rubber

Part No.
R412021776

Technical information

When using polyurethane tubing, we recommend using additional stiffener sleeves.

For push-in fittings, only use plug accessories made of plastic (polyamide) from our catalog.

The min. control pressure must be adhered to, since otherwise faulty switching and valve failure may result!

The pressure dew point must be at least 15 °C under ambient and medium temperature and may not exceed 3 °C .

The oil content of compressed air must remain constant during the life cycle.

Use only the approved oils from AVENTICS. Further information can be found in the “Technical information” document (available in https://www.emerson.com/en-us/support).

Dimensions

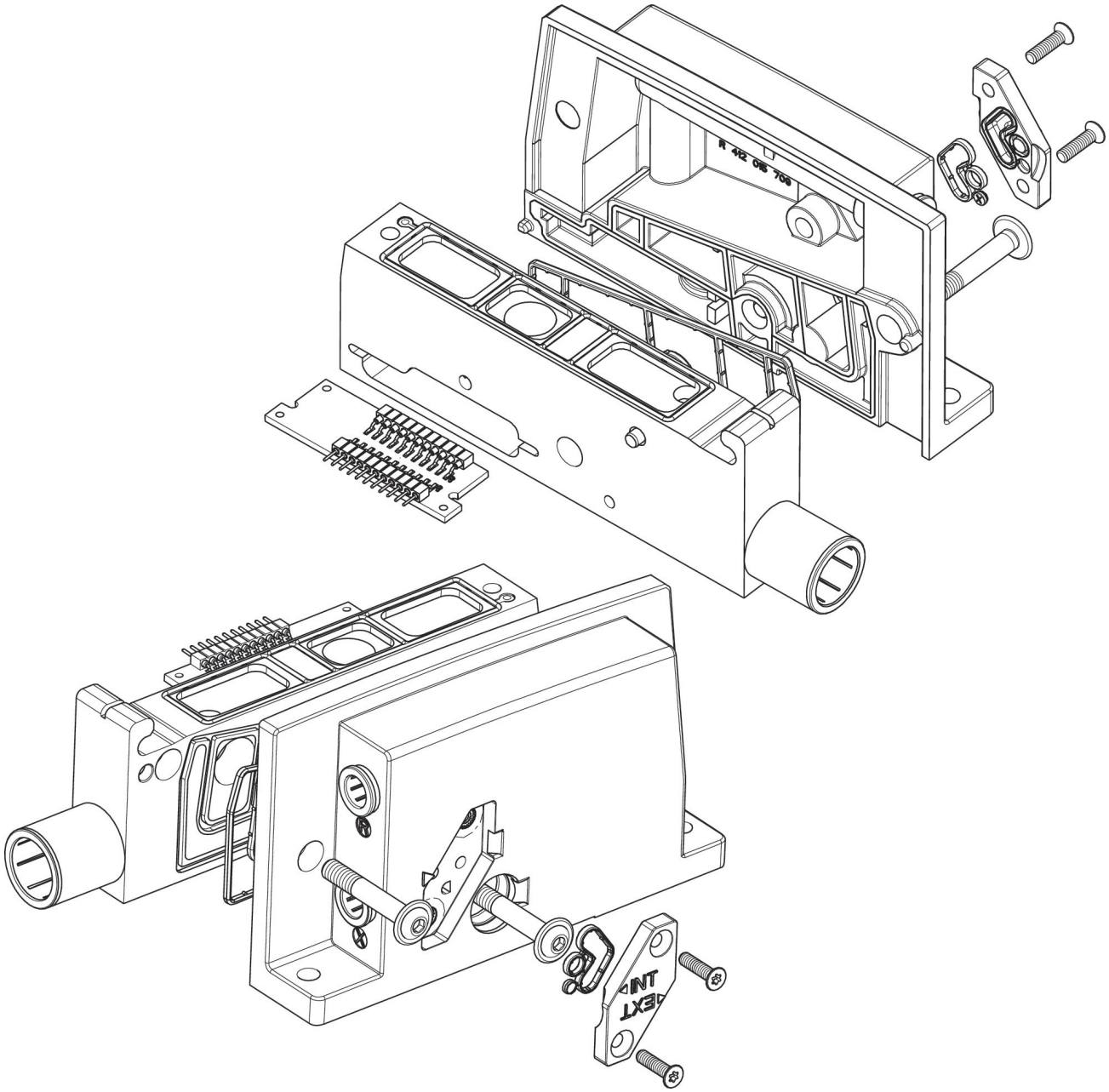

Extension kit, combination plate, Series AV

R412022591

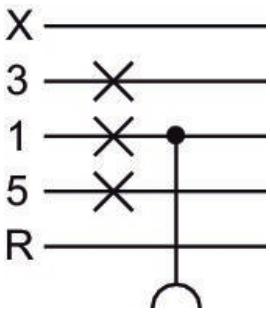

Technical data

Industry
Industrial

Type
Base plate

Type
Supply plate, connection 1, separate pressure zones in channels 1/3/5

Compressed air connection input
Ø 3/8″

Pilot connection
Ø 3/8″

Valve system version
Multipole

Scope of delivery
Combination module, right end plate AV05, screws, and seal

Working pressure min.
-0.95 bar

Working pressure max
10 bar

Min. ambient temperature
-10 °C

Max. ambient temperature
60 °C

Medium
Compressed air

Material

Housing material
Aluminum

Seal material
Nitrile rubber

Part No.
R412022591

Technical information

When using polyurethane tubing, we recommend using additional stiffener sleeves.

For push-in fittings, only use plug accessories made of plastic (polyamide) from our catalog.

The min. control pressure must be adhered to, since otherwise faulty switching and valve failure may result!

The pressure dew point must be at least 15 °C under ambient and medium temperature and may not exceed 3 °C .

The oil content of compressed air must remain constant during the life cycle.

Use only the approved oils from AVENTICS. Further information can be found in the “Technical information” document (available in https://www.emerson.com/en-us/support).

Dimensions

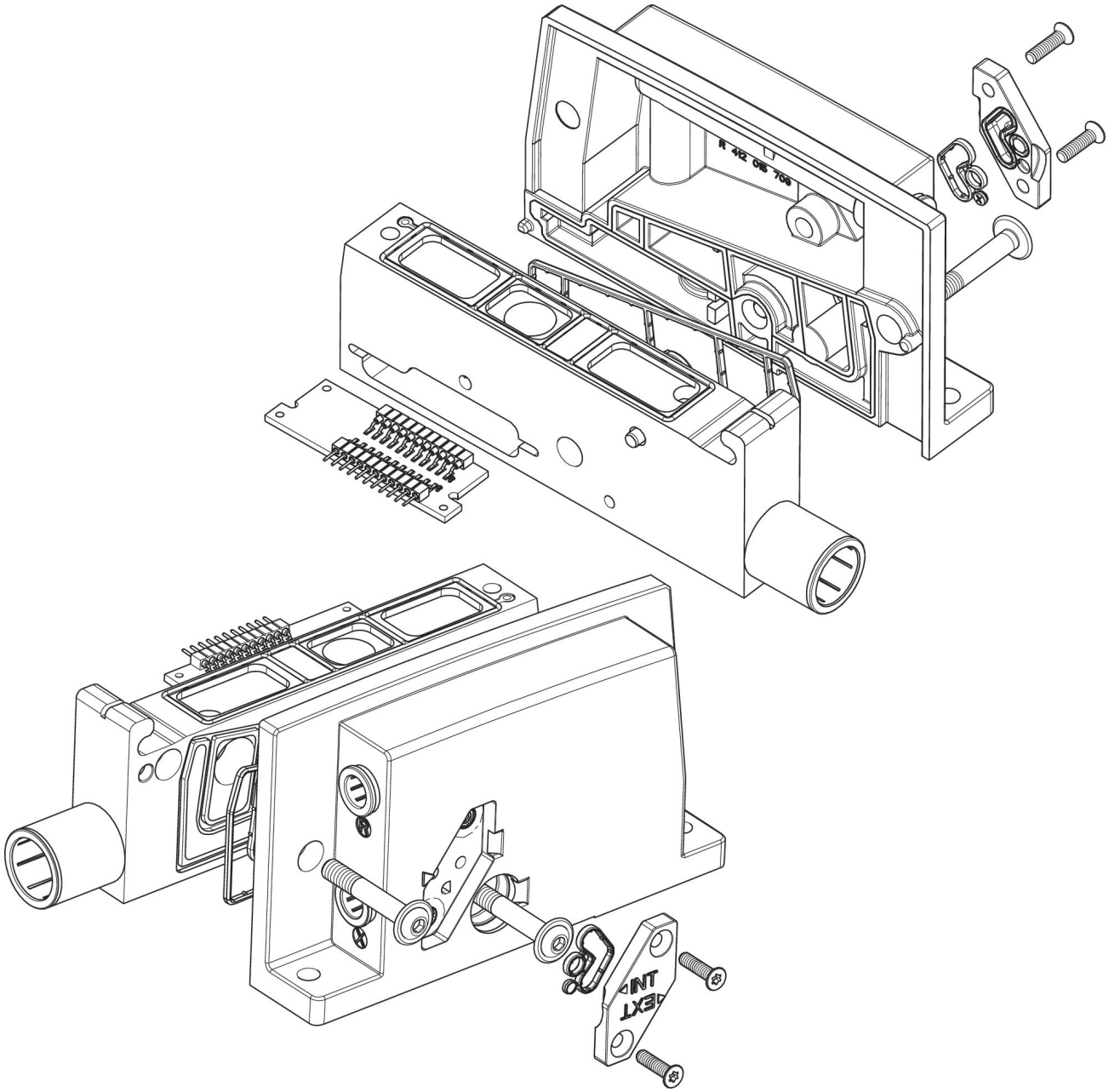

Extension kit, combination plate

- for series AV03, AV05, HF02-LG

Ambient temperature min./max.	-10 ... 60 °C
Weight	0.21 kg

Technical data

Part No.	Valve system version	Type	Scope of delivery	Scope of delivery
R422004007	Fieldbus	32 outputs	Includes screws and seals.	1 piece
R422004056	Multipole	30 outputs	Includes screws and seals.	1 piece

Technical information

The multipole combination plate can transmit up to 30 signals and is suitable for use with AV variants with 25-pin D-Sub plug as well as 44-pin D-Sub plug.
Connection R must not be closed! Closing connection R leads to faulty switching of the AV valves. Further information can be found in the operating instructions (R412018150).

Technical information

Material	
Housing	Aluminum
Seals	Nitrile rubber

Dimensions

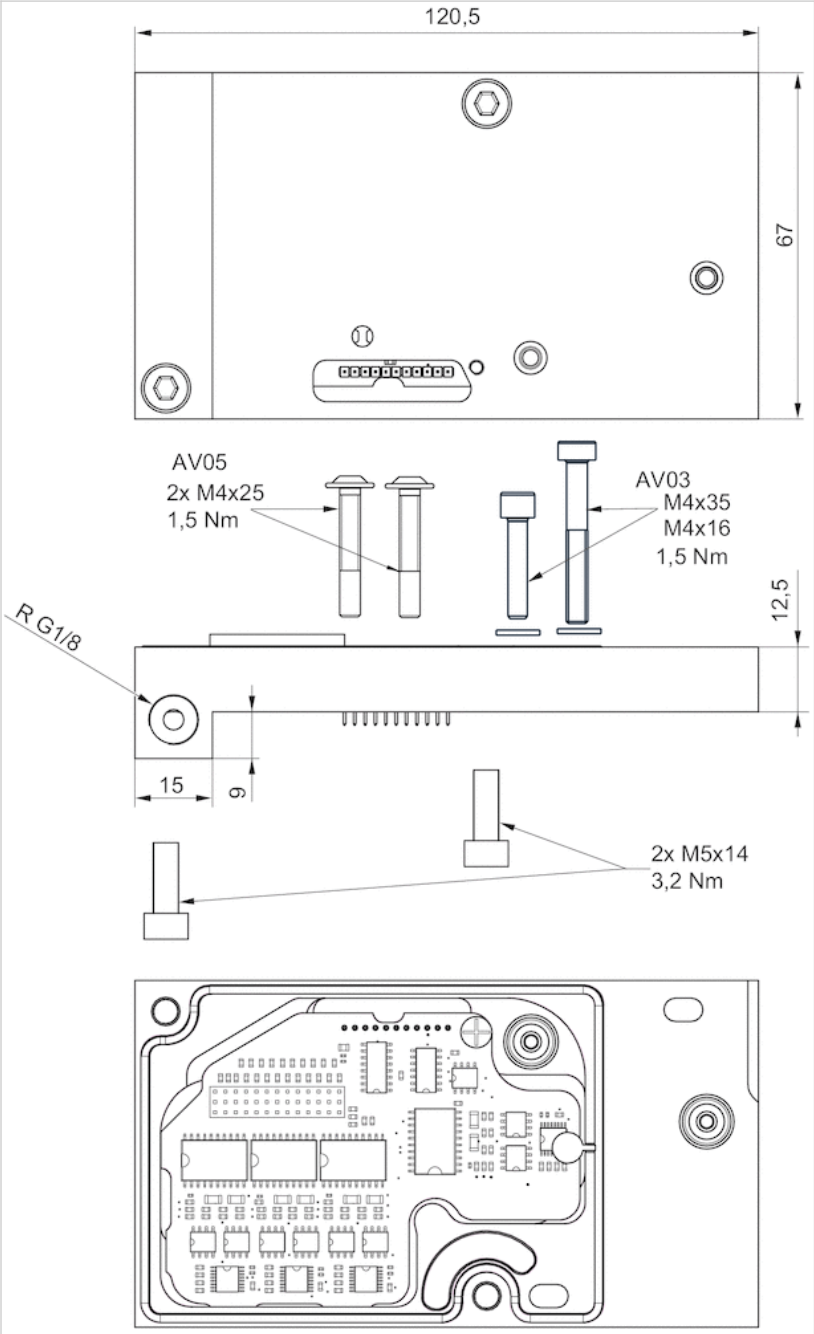
120,5
67
AV05
2x M4x25
1,5 Nm
AV03
M4x35
M4x16
1,5 Nm
12,5
R G1/8
15
6
2x M5x14
3,2 Nm

Extension kit, exhaust module for supply plate

- for series AV05

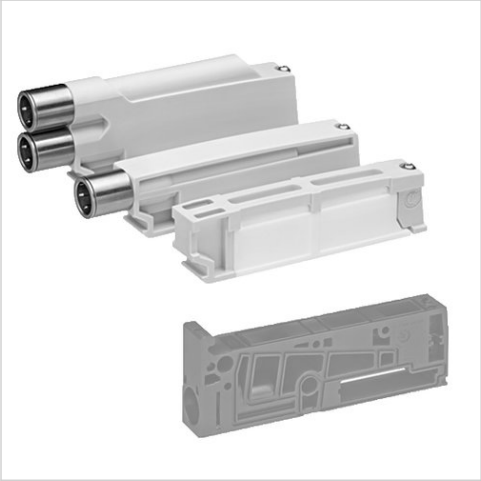

Working pressure min./max.	-0.95 ... 10 bar
Ambient temperature min./max.	-10 ... 60 °C
Medium	Compressed air

Technical data

Part No.	Type
R412020087	Exhaust module 3, 5, and R with flat silencer
R412020088	Exhaust module with combined collected exhaust 3 and 5
R412020089	Exhaust module with separate collected exhaust 3 and 5

Part No.	Scope of delivery
R412020087	Exhaust module, including 1 seal, 1 mounting screw
R412020088	Exhaust module: incl. 1 mounting screw, push-in fitting Ø 12 mm
R412020089	Exhaust module: incl. 1 mounting screw, push-in fitting Ø 12 mm

Technical information

When using polyurethane tubing, we recommend using additional stiffener sleeves.
For push-in fittings, only use plug accessories made of plastic (polyamide) from our catalog.

Technical information

Material	
Housing	Polyamide fiber-glass reinforced
Seals	Nitrile rubber

Dimensions

Overview drawing

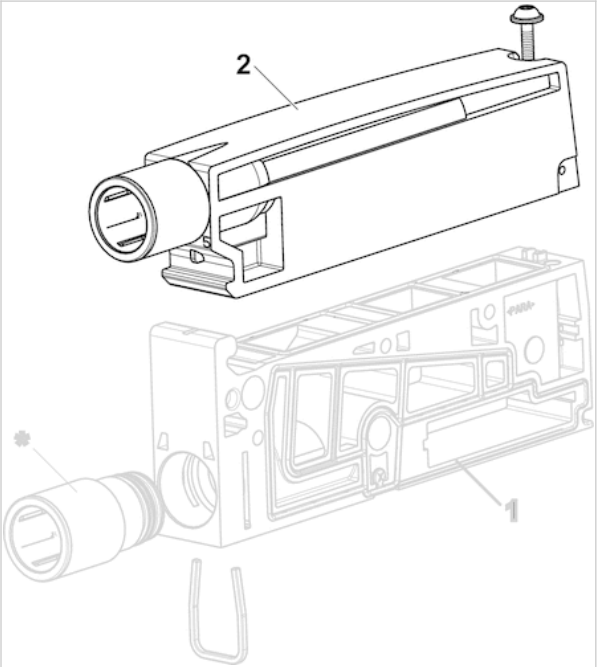

Exhaust module Series AV

- For port channels 2, 4
- push-in fitting

Working pressure min./max.	0 ... 10 bar
Ambient temperature min./max.	-10 ... 60 °C
Medium	Compressed air
Weight	0.07 kg

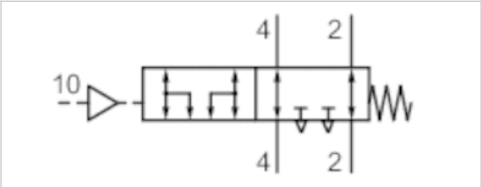

Technical data

Part No.	Type Port 1	Compressed air connection Output	Compressed air connection pilot air	Flow Qn
R422003046	push-in fitting	Ø 8	Ø 4	1080 l/min
R422003185	push-in fitting	Ø 6	Ø 4	720 l/min
R422003187	push-in fitting	Ø 4	Ø 4	280 l/min

Technical information

When using polyurethane tubing, we recommend using additional stiffener sleeves.
For push-in fittings, only use plug accessories made of plastic (polyamide) from our catalog.
Pneumatic connection to base plate valves, suitable for all sizes in the AV03 and AV05 series
Particularly suitable for 5/3 CC valves, since the remaining pressure in the actuator can be exhausted when the control pressure is applied.
The exhaust module and the air circuit should be tested monthly to ensure they function correctly.
Applications with vertical actuators with exhaust or pressure throttles and a maximum load of 15 kg as well as up to a speed of Vmax 33 mm/s .

Technical information

Material	
Housing	Aluminum
Seals	Nitrile rubber

Dimensions

Dimensions

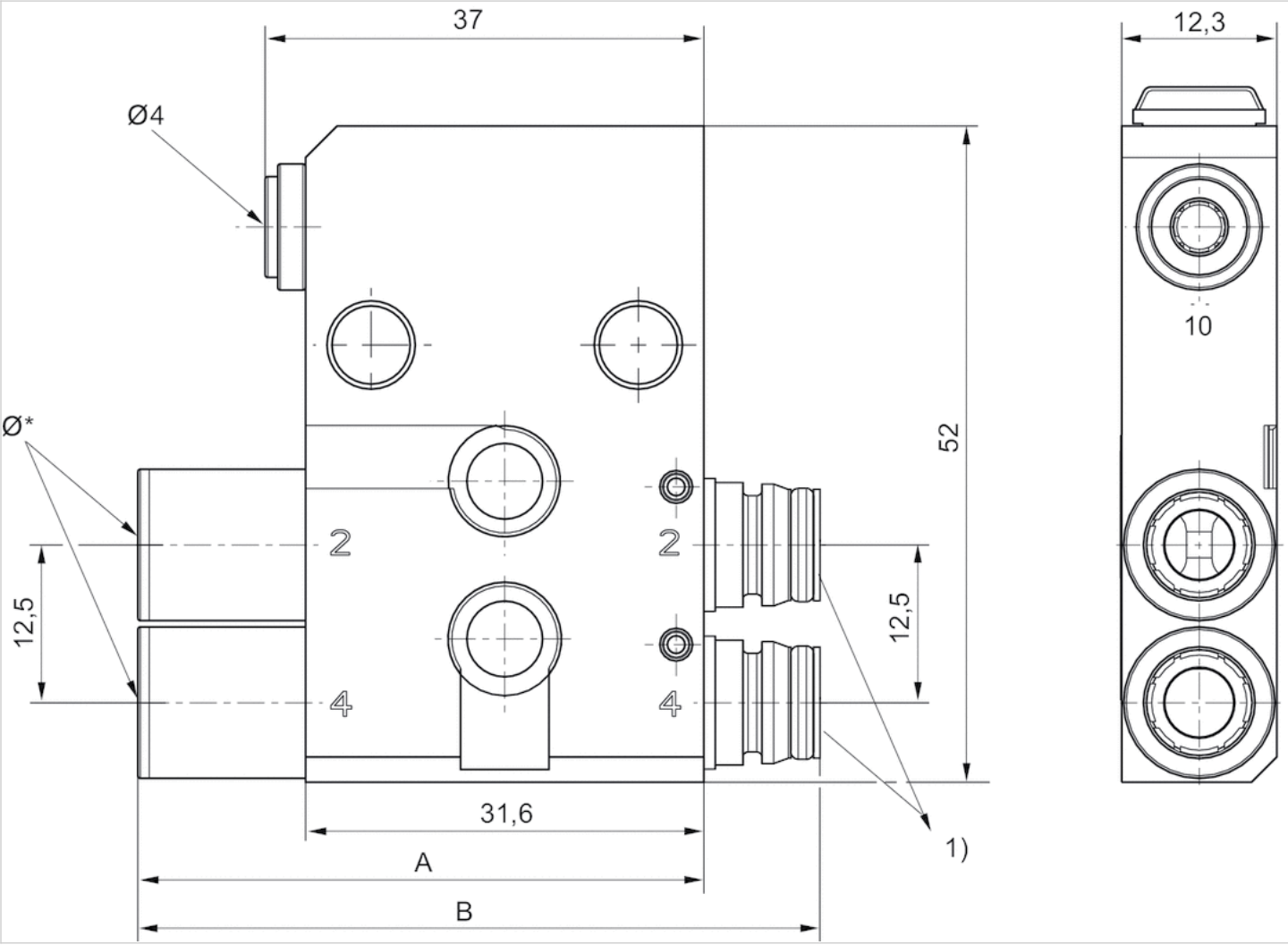

1) Pneumatic connection to base plate valves, suitable for all sizes in the AV03 and AV05 series

Dimensions

Part No.	Ø*	A	B
R422003046	8	46	54
R422003185	6	42	50
R422003187	4	38	46

Diagrams

Minimum control pressure (depending on operating pressure)

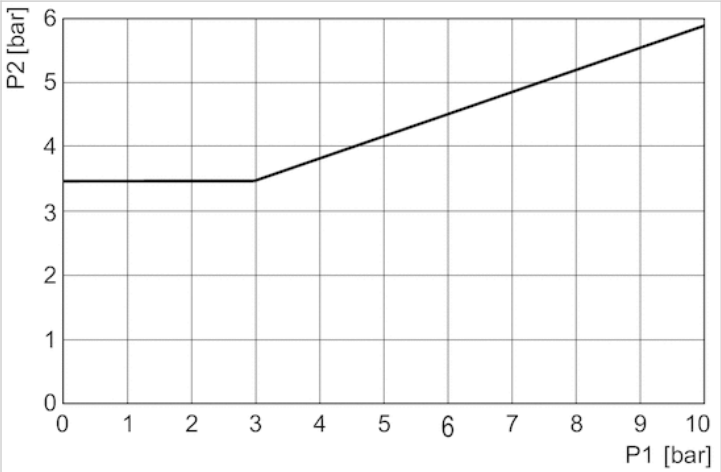

p1 = pressure on connections 2 and 4, p2 = control pressure

Shut-off module, Series AV

- For port channels 2, 4
- Qn = 250-750 l/min
- Compressed air connection output Ø 1/4″ Ø 8 Ø 6 Ø 4

Activation	Mechanical
Working pressure min./max.	0 ... 10 bar
Ambient temperature min./max.	-10 ... 60 °C
Medium temperature min./max.	-10 ... 60 °C
Medium	Compressed air
Weight	0.08 kg

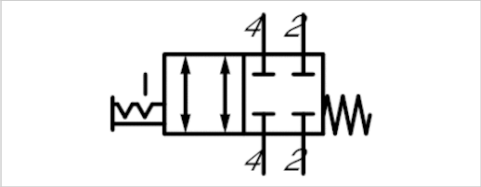

Technical data

Part No.	Compressed air connection type	Compressed air connection Output	Flow rate value
			Qn
R422102699	push-in fitting	Ø 1/4″	550 l/min
R422102704	push-in fitting	Ø 8	750 l/min
R422102705	push-in fitting	Ø 6	550 l/min
R422102706	push-in fitting	Ø 4	250 l/min

Technical information

When using polyurethane tubing, we recommend using additional stiffener sleeves.
Pneumatic connection to base plate valves, suitable for all sizes in the AV03 and AV05 series
For push-in fittings, only use plug accessories made of plastic (polyamide) from our catalog.

Technical information

Material	
Housing	Aluminum
Seals	Nitrile butadiene rubber

Dimensions

Dimensions

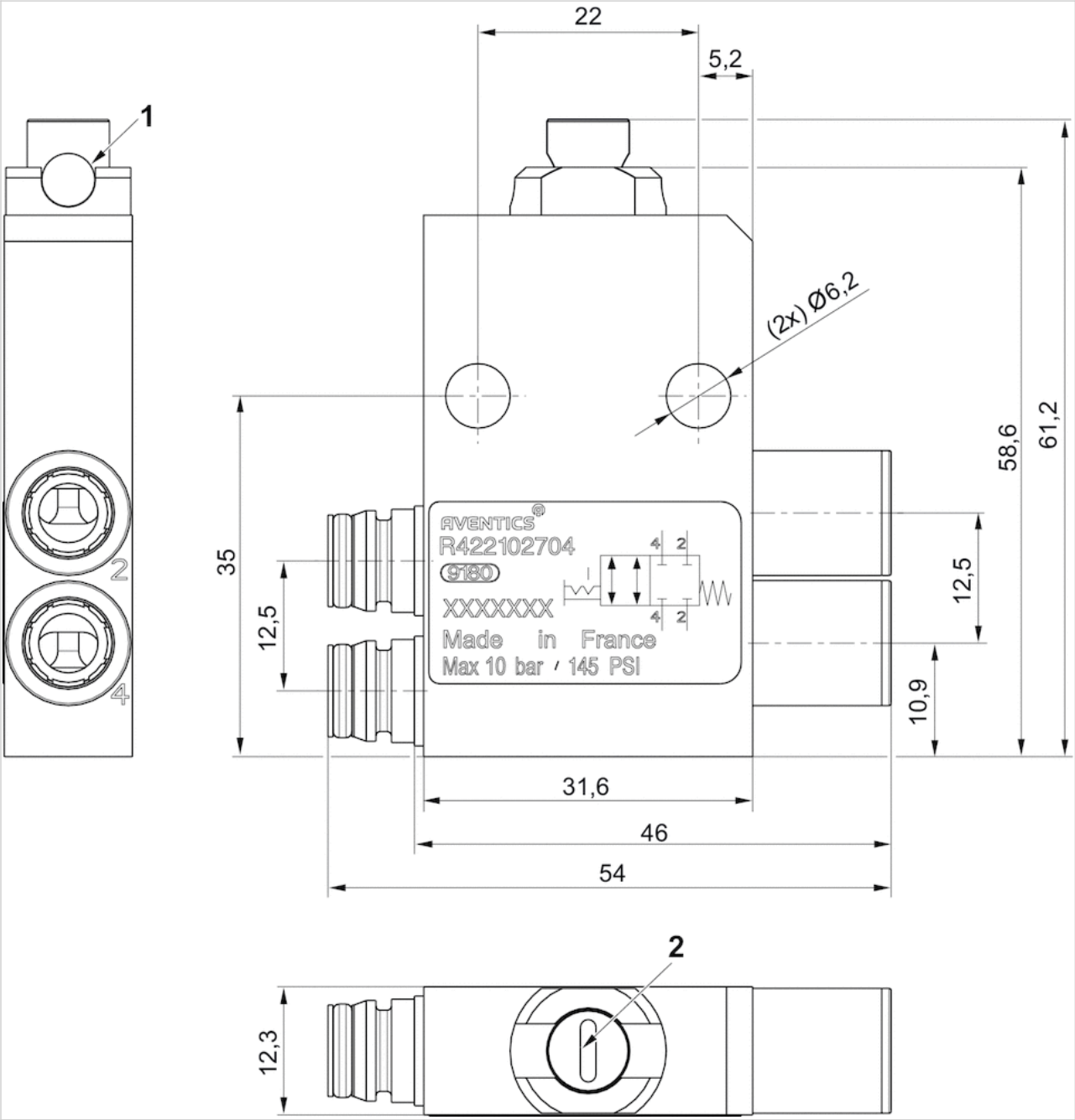

1) Through hole for cable lock
Order cable lock 7472D02758 separately
2) Manual override lock

Shut-off module, Series AV

- With position detection, for port channels 2, 4
- push-in fitting

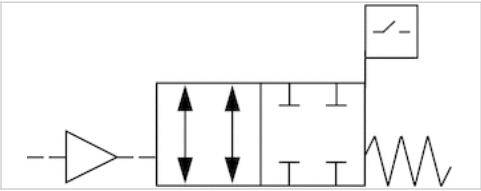

Activation	pneumatically
Working pressure min./max.	0 ... 10 bar
Ambient temperature min./max.	0 ... 60 °C
Medium temperature min./max.	0 ... 60 °C
Medium	Compressed air
Nominal flow Qn	400 l/min
Operating voltage DC, min.	10 V DC
Operating voltage DC, max.	30 V DC
Sensor Version	PNP
Max. power consumption	15 A
Voltage drop sensor U at Imax	≤ 2,5 V
Sensor Protection class	IP67
Weight	0.1 kg

Technical data

Part No.	Compressed air connection type Input	Compressed air connection Output
R422101511	push-in fitting	Ø 6
R422101510	push-in fitting	Ø 8
R422101509	push-in fitting	Ø 1/4″

Technical information

For push-in fittings, only use plug accessories made of plastic (polyamide) from our catalog.
In the non-actuated state, the sensor signal is “high”

Technical information

Material	
Housing	Aluminum
Seals	Nitrile butadiene rubber

Dimensions

Dimensions

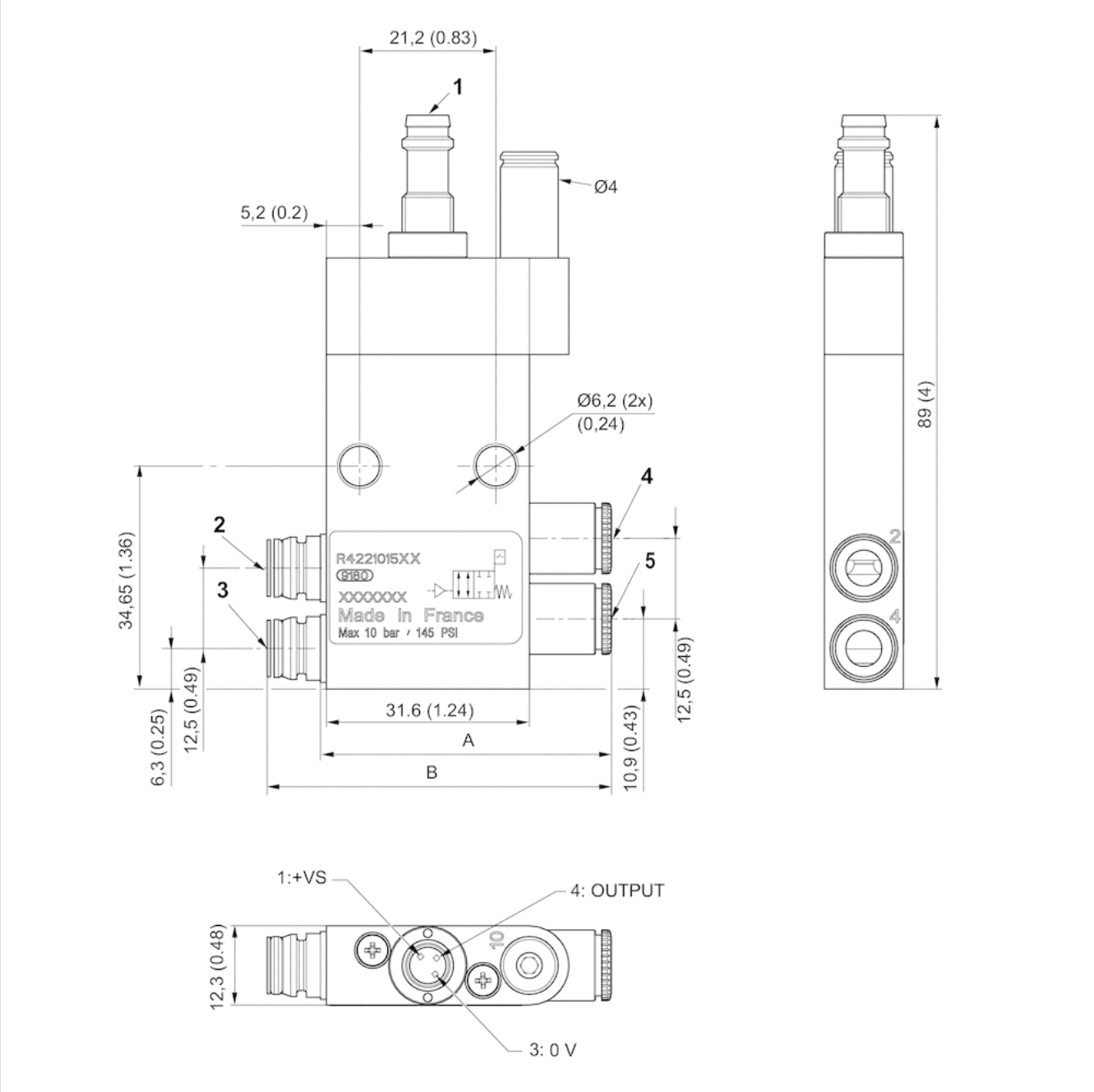

1) Sensor plug M8, 3-pin
electronic PNP
The orientation of the pins depends on the angular position of the sensor, which is random.
2) Connection 2, valve side
3) Connection 4, valve side
4) Operating line 2
5) Operating line 4

Dimensions

Part No.	A	B
R422101511	42±1	50±1

Part No.	A	B
R422101510	45±1	54±1
R422101509	45±1	53±1

Diagrams

Minimum control pressure (depending on operating pressure)

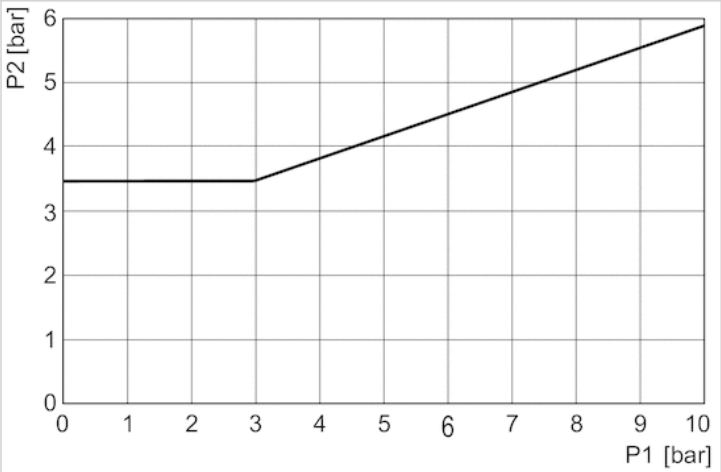

p1 = pressure on connections 2 and 4, p2 = control pressure

Pin assignments

Sensor circuit diagram

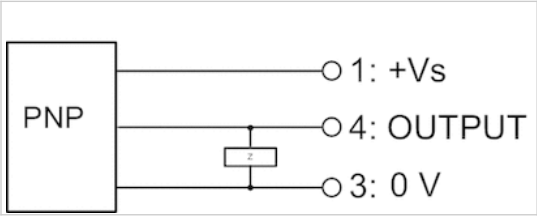

Pressure regulator, Series AV

- Inch version
- push-in fitting
- Controlled port 2 4

Adjustment range min./max.	0.5 ... 10 bar
Ambient temperature min./max.	-10 ... 60 °C
Medium temperature min./max.	-10 ... 60 °C
Medium	Compressed air
Weight	0.2 kg

Technical data

Part No.		Compressed air connection type Input	Compressed air connection Output	Repetitive precision
R422003563		push-in fitting	Ø 1/4″	± 10 %
R422003571		push-in fitting	Ø 1/4″	± 10 %

Part No.	Controlled port
R422003563	2
R422003571	4

Order pressure gauge separately

Technical information

Pneumatic connection to base plate valves, suitable for all sizes in the AV03 and AV05 series
Mounting bracket (2x) for mounting to the mounting plate: R422103091
For 2 or more AV pressure regulators assembled into blocks with pressure gauges, use of push-in fitting R412005046 is recommended for every second pressure gauge

Technical information

Material	
Housing	Aluminum
Seals	Acrylonitrile butadiene rubber

Dimensions

Dimensions

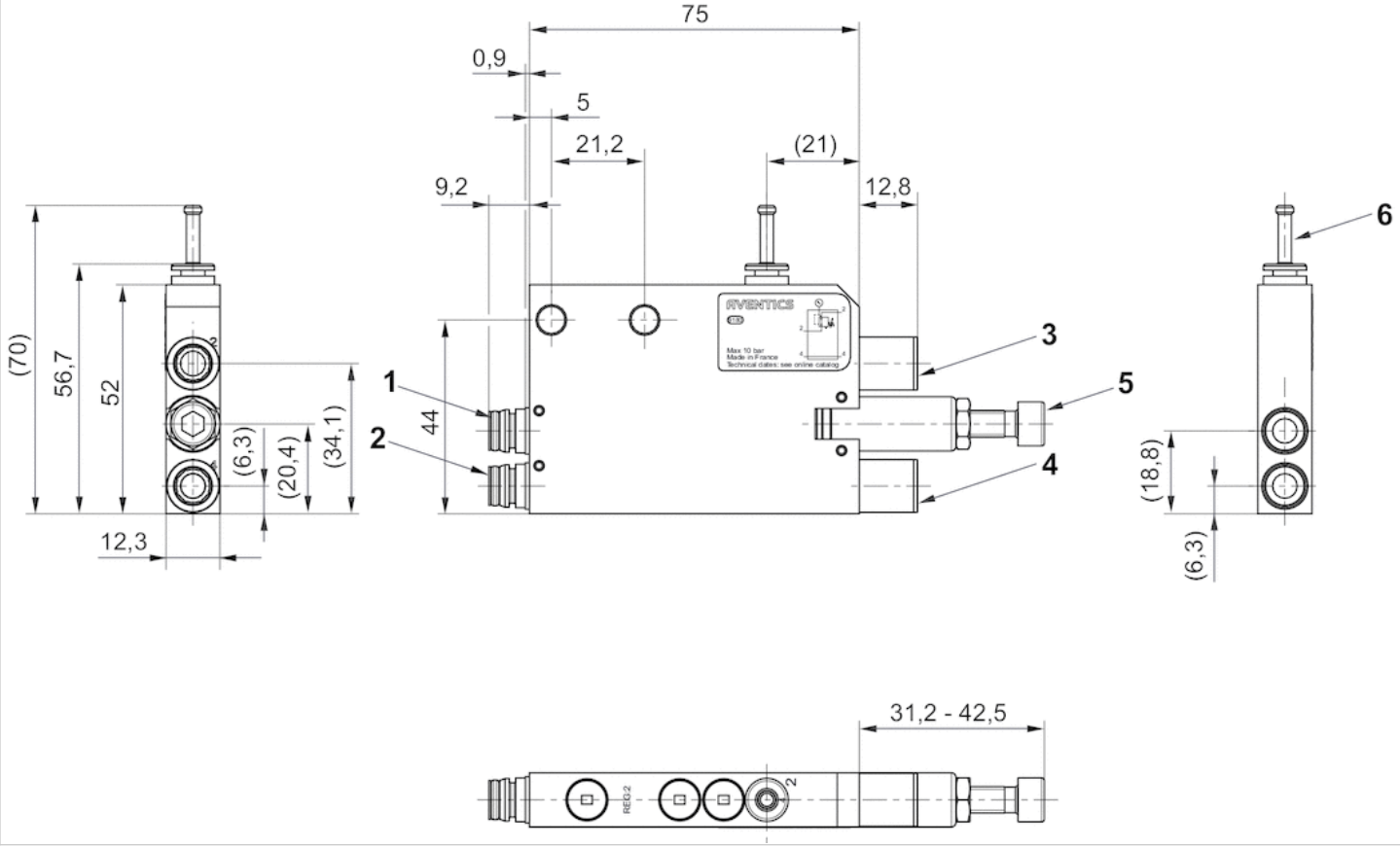

1) Connection 2, valve side
2) Connection 4, valve side
3) Operating line 2
4) Operating line 4
5) adjustment screw, Port 2, 4
6) plugs
7) Logic valves

Diagrams

Flow diagram, Port 2

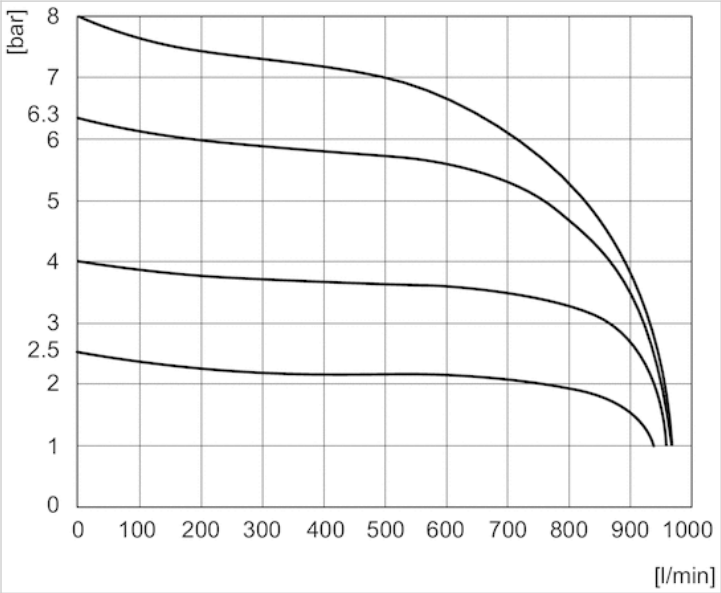

Pv = 9 bar

Flow diagram, Port 4

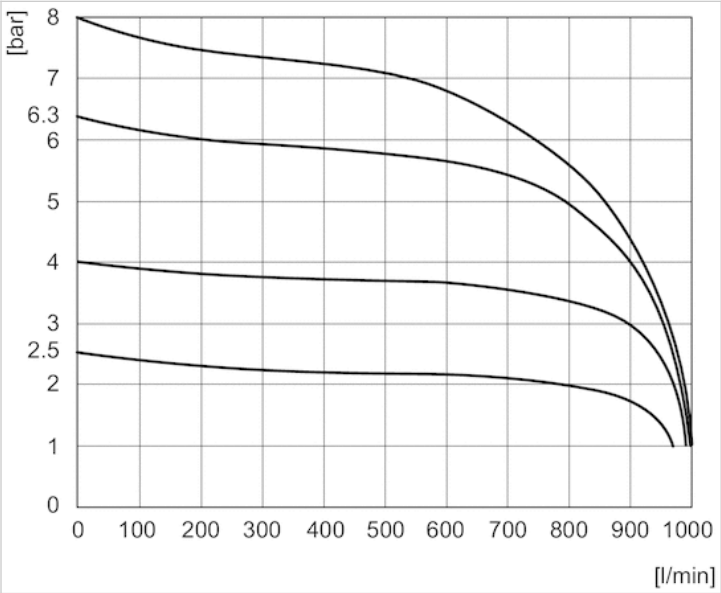

Pv = 9 bar

Flow rate coupler, Series AV Inch version

- For port channels 2, 4

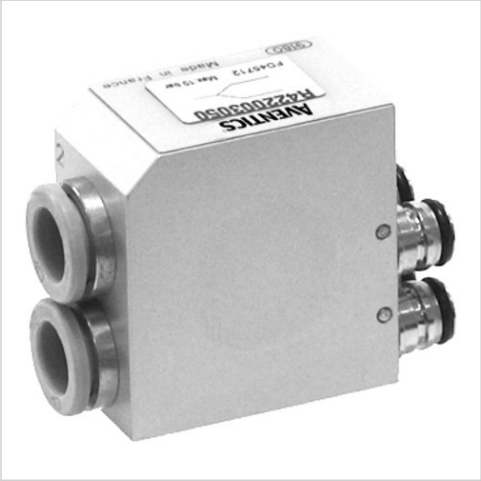

Working pressure min./max.	-0.9 ... 10 bar
Ambient temperature min./max.	-10 ... 60 °C
Medium	Compressed air
Weight	0.12 kg

Technical data

Part No.	Type	Fig.
R422102791	2 x 3/8"	Fig. 1
R422102795	1 x 3/8"	Fig. 2

Technical information

When using polyurethane tubing, we recommend using additional stiffener sleeves.
For push-in fittings, only use plug accessories made of plastic (polyamide) from our catalog.
Pneumatic connection to base plate valves, suitable for all sizes in the AV03 and AV05 series
Doubling of flow rate performance by connecting the working connections of two valves.
Both valves must be identical models and controlled electrically at the same time.

Technical information

Material	
Housing	Aluminum
Seals	Nitrile rubber

Dimensions

Fig. 1

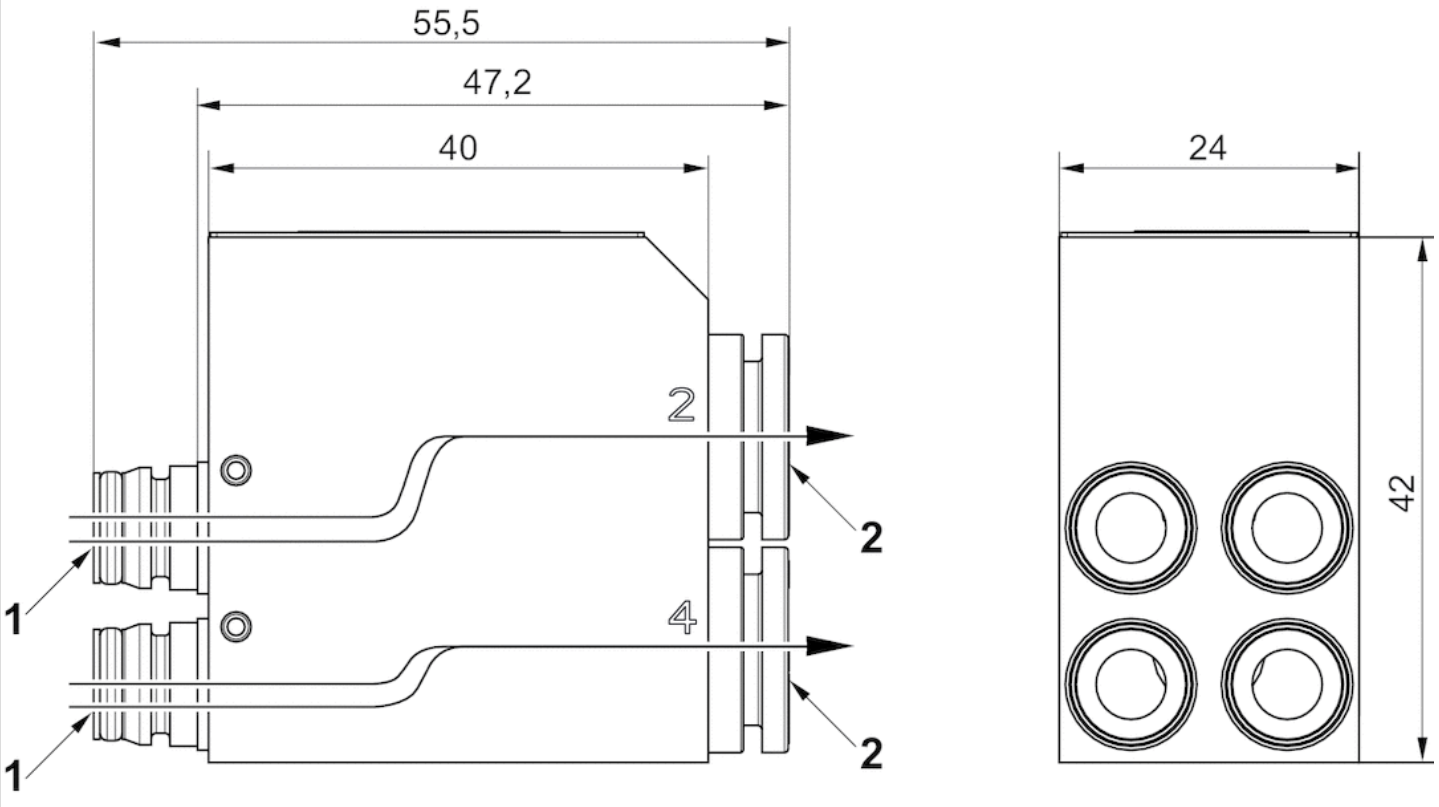

1) Pneumatic connection to base plate valves, suitable for all sizes in the AV03 and AV05 series
2) 2 x Ø 10

Dimensions

Number of valves	2	2	2	2	2	2
Valve function	5/2	5/3	2x3/2	5/2	5/3	2x3/2
Series	AV03	AV03	AV03	AV05	AV05	AV05
Flow [l/min]	670	670	670	1100	1100	1100

Dimensions

Fig. 2

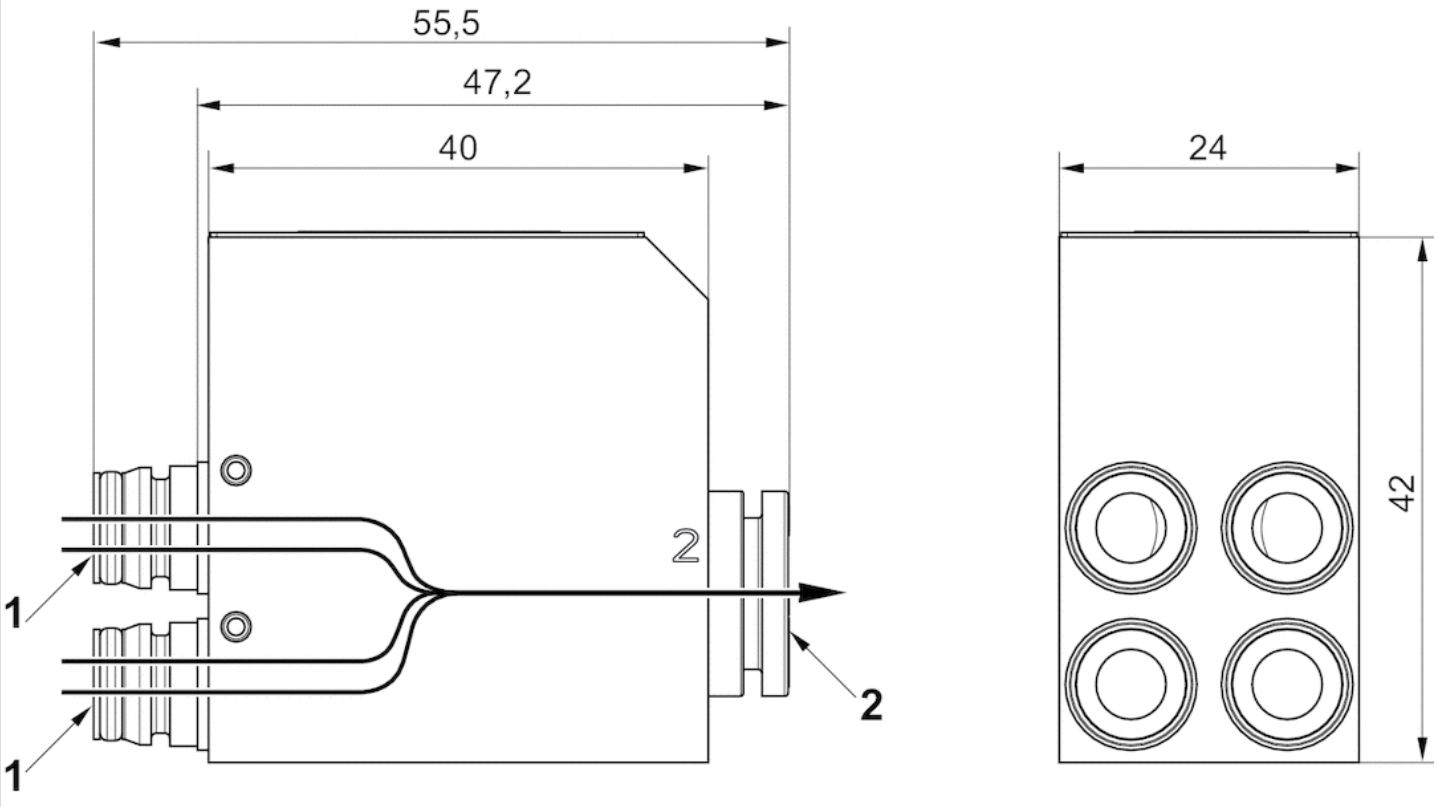

1) Pneumatic connection to base plate valves, suitable for all sizes in the AV03 and AV05 series
2) 1 x Ø 10

Dimensions

Number of valves	2	2
Valve function	2x3/2	2x3/2
Series	AV03	AV05
Flow [l/min]	830	1400

Transition plate

- for control cabinet mounting
- Compressed air connection output G 1/4
- for AV05-BP

Working pressure min./max.	-0.95 ... 10 bar
Ambient temperature min./max.	-10 ... 60 °C
Medium temperature min./max.	-10 ... 60 °C
Medium	Compressed air

Technical data

Part No.	Type	Scope of delivery
R412026481	Internal assembly	Transition plate, sealing kit, mounting screws, sealing tape
R412026482	Internal assembly	Transition plate, sealing kit, mounting screws, sealing tape
R412026483	Internal assembly	Transition plate, sealing kit, mounting screws, sealing tape
R412026484	Internal assembly	Transition plate, sealing kit, mounting screws, sealing tape
R412026485	External assembly	Transition plate, sealing kit, mounting screws, gasket
R412026486	External assembly	Transition plate, sealing kit, mounting screws, gasket
R412026487	External assembly	Transition plate, sealing kit, mounting screws, gasket
R412026488	External assembly	Transition plate, sealing kit, mounting screws, gasket

Part No.	Compressed air connection Input [1]	Compressed air connection Output [2 / 4]
R412026481	G 3/8	G 1/4
R412026482	G 3/8	G 1/4
R412026483	G 3/8	G 1/4
R412026484	G 3/8	G 1/4
R412026485	G 3/8	G 1/4
R412026486	G 3/8	G 1/4
R412026487	G 3/8	G 1/4
R412026488	G 3/8	G 1/4

Part No.	Compressed air connection Exhaust [3 / 5]	Compressed air connection Pilot connection [X]
R412026481	G 3/8	M5
R412026482	G 3/8	M5
R412026483	G 3/8	M5
R412026484	G 3/8	M5

Part No.	Compressed air connection Exhaust [3 / 5]	Compressed air connection Pilot connection [X]
R412026485	G 3/8	M5
R412026486	G 3/8	M5
R412026487	G 3/8	M5
R412026488	G 3/8	M5

Part No.	Compressed air connection Pilot control exhaust [R]	Number of valve positions	Material
R412026481	G 1/8	4	Aluminum anodized
R412026482	G 1/8	8	Aluminum anodized
R412026483	G 1/8	12	Aluminum anodized
R412026484	G 1/8	16	Aluminum anodized
R412026485	G 1/8	4	Stainless steel
R412026486	G 1/8	8	Stainless steel
R412026487	G 1/8	12	Stainless steel
R412026488	G 1/8	16	Stainless steel

Part No.	Fig.	
R412026481	Fig. 1	-
R412026482	Fig. 1	-
R412026483	Fig. 1	1)
R412026484	Fig. 1	1)
R412026485	Fig. 2	-
R412026486	Fig. 2	-
R412026487	Fig. 2	1)
R412026488	Fig. 2	1)

1) Supply module between 8th and 9th valve position

Technical information

The protection class depends on the stability of the mounting wall.
Further information about assembling of fittings and tolerances of adaptable tubing can be found in the “Technical information” document (available in the Media Centre).

Technical information

Material	
Housing	Aluminum, anodized Stainless steel

Dimensions

Fig. 1

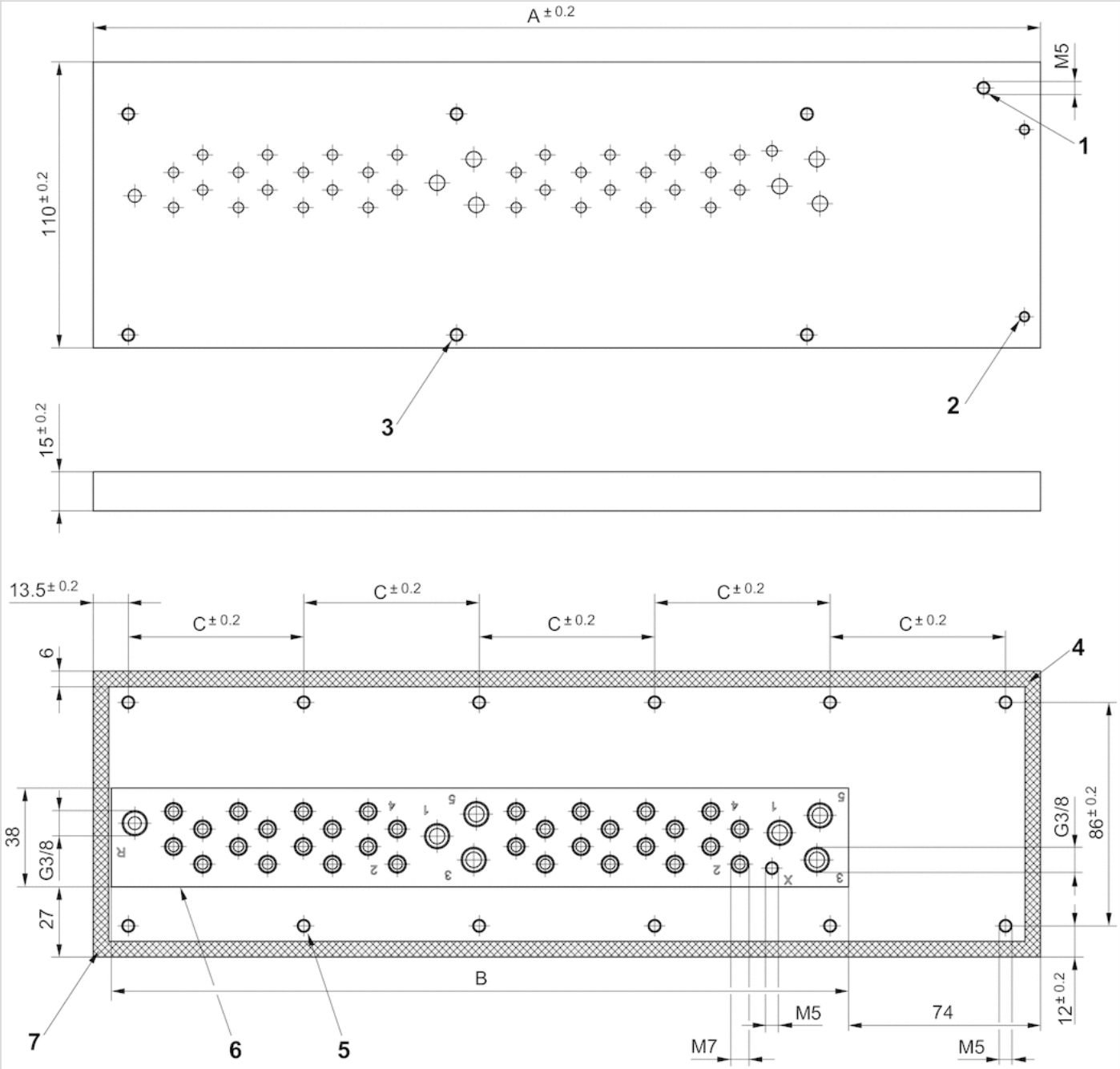

1) Ground screw
2) Torque for valve system assembly: M4: 2.5 Nm
3) Torque for valve system assembly: M5: 5 Nm
4) sealing surface
5) Torque for control cabinet assembly: M5: 5 Nm
6) Control cabinet cut-out
7) Assembly note for sealing strip: see Fig. 3

Dimensions

Part No.	A	B	C
R412026481	183	109	52

Part No.	A	B	C
R412026482	233	159	51.5
R412026483	315	241	57.6
R412026484	365	291	67.6

Dimensions

Fig. 2

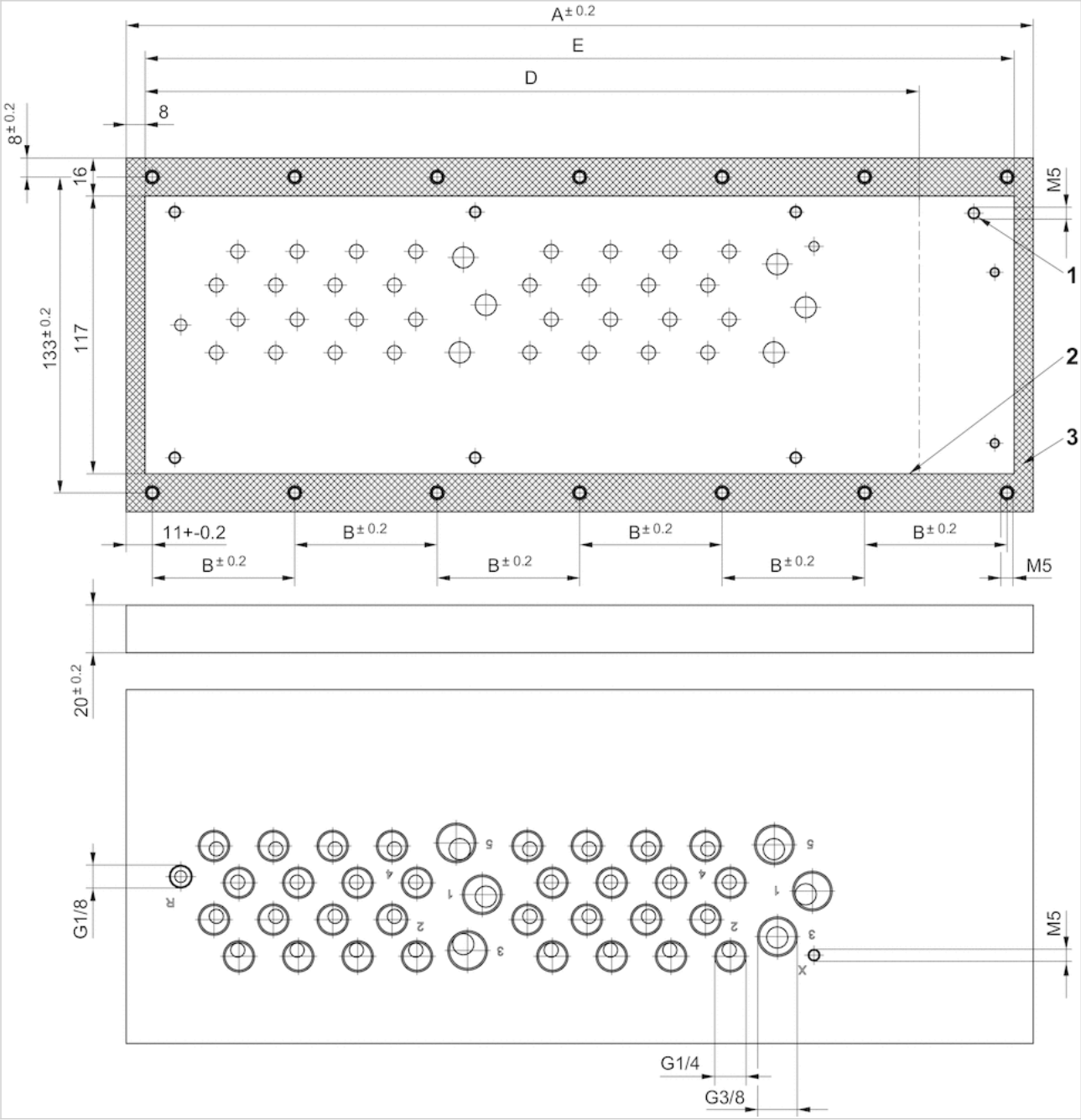

1) Thread for ground screw
2) Control cabinet cut-out
3) sealing surface

Dimensions

Part No.	A	B	D - Control cabinet cut-out Multipole	E - Control cabinet cut-out Fieldbus
R412026485	200	59.33	144	184
R412026486	250	57	194	234
R412026487	332	62	276	316
R412026488	382	60	326	366

Dimensions

Maximum outer dimensions for push-in fitting

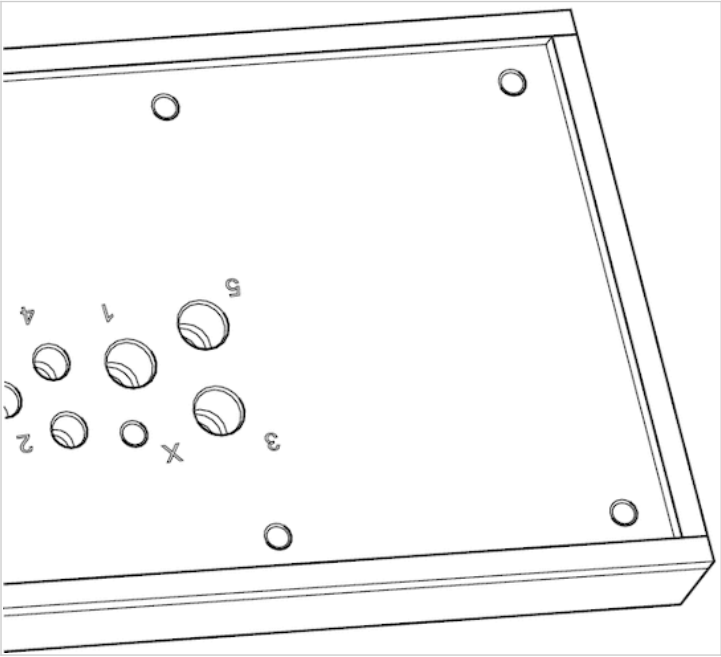

Glue sealing strip at the joint

Dimensions

Connection type	2 , 4	1, 3 and 5 (on bottom)	X (top, bottom)
Connection thread	G 1/4	G 3/8	M5
Max. external diameter	19	24,75	10,9

R (top, bottom)
G 1/8
15,5

End plate right

- for AV05

Ambient temperature min./max.	-10 ... 60 °C
Medium temperature min./max.	-10 ... 60 °C
Weight	0.08 kg

Technical data

Part No.	Compressed air connection Pilot connection [X]	Compressed air connection Pilot control exhaust [R]	Delivery unit	Fig.
R412020078	Ø 6	Ø 6	1 piece	Fig. 1
R412025508	-	Ø 6	1 piece	Fig. 2

Part No.	
R412020078	1)
R412025508	2)

1) Pilot air supply changable: internal/external

2) Pilot air supply only via supply plates

Technical information

The min. control pressure must be adhered to, since otherwise faulty switching and valve failure may result!
The pressure dew point must be at least 15 °C under ambient and medium temperature and may not exceed 3 °C .
The oil content of compressed air must remain constant during the life cycle.
Use only the approved oils from AVENTICS. Further information can be found in the “Technical information” document (available in the MediaCentre).

When using polyurethane tubing, we recommend using additional stiffener sleeves.
For push-in fittings, only use plug accessories made of plastic (polyamide) from our catalog.

Technical information

Material	
Housing	Polyamide fiber-glass reinforced
Screws	Steel

Dimensions

Fig. 1

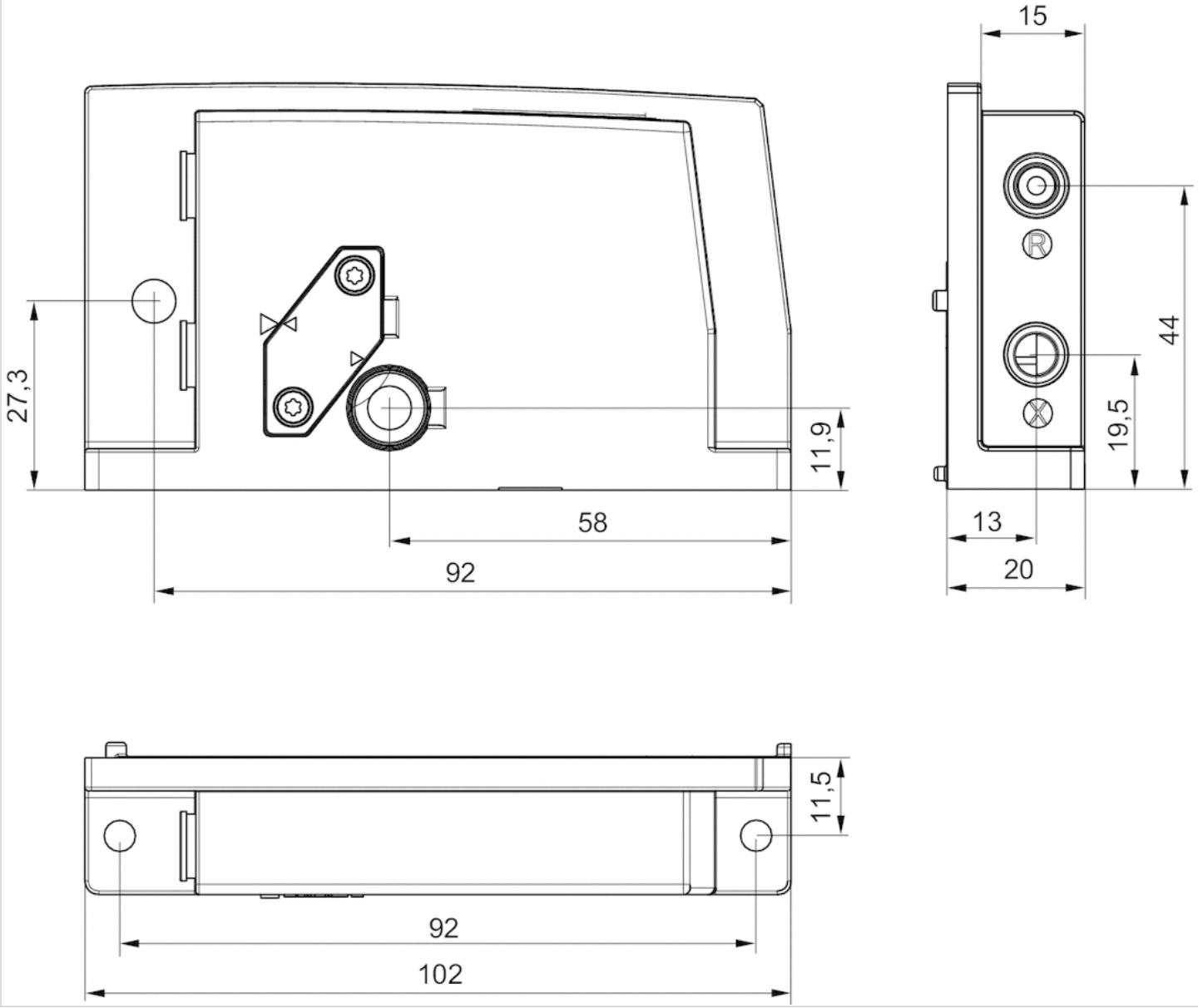

Fig. 2

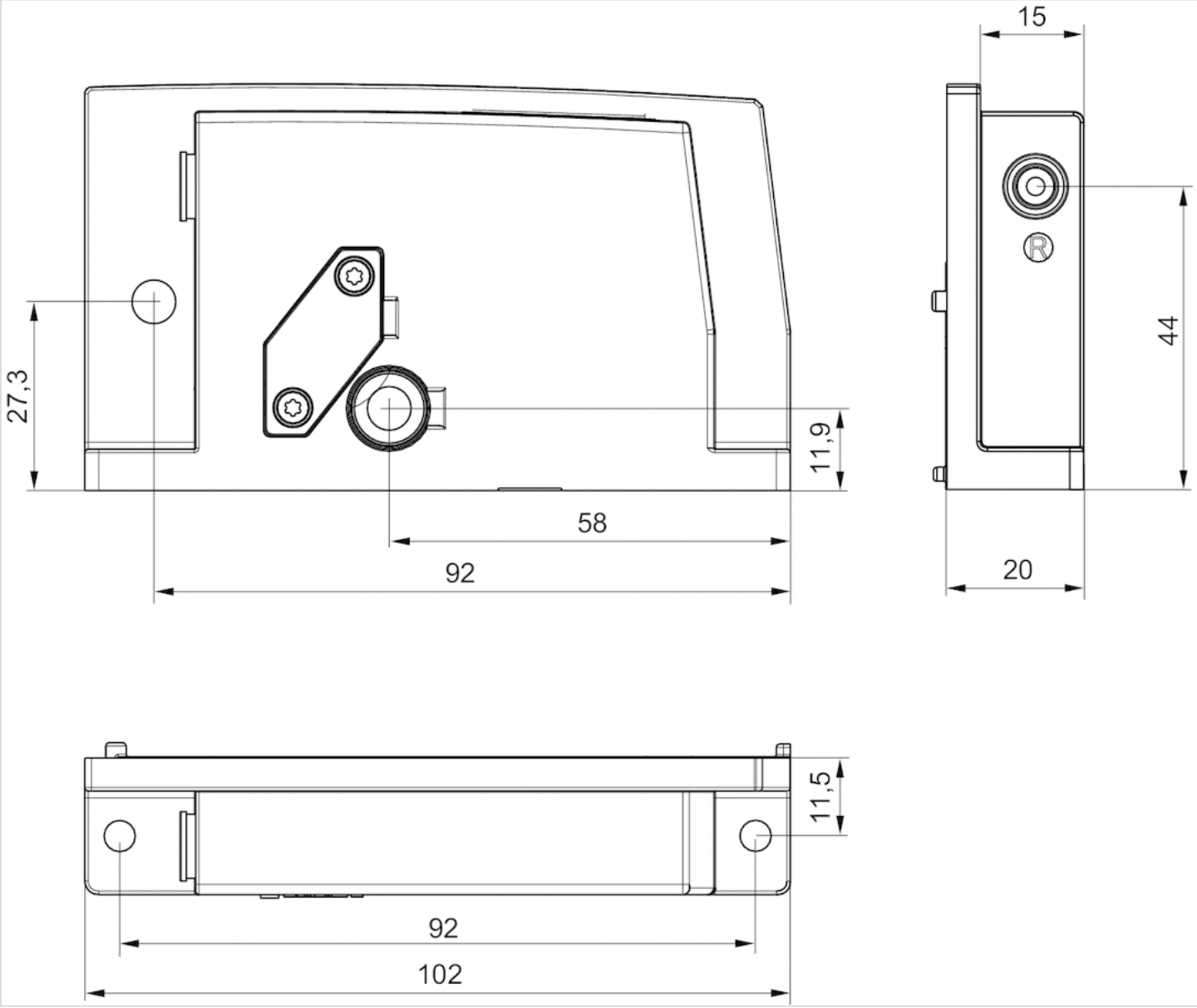

Push-in fittings

- for AV

Working pressure min./max.	-0.95 ... 10 bar
Ambient temperature min./max.	-10 ... 60 °C
Medium	Compressed air

Technical data

Part No.	Type	Scope of delivery
R412018617	Push-in fitting Ø 4 mm - 5/32″, straight	2 piece
R412018618	Push-in fitting Ø 6 mm, straight	2 piece
R412018619	Push-in fitting Ø 8 mm - 5/16″, straight	2 piece
R412018621	Push-in fitting Ø 3 mm, angled, short, and push-in fitting Ø 3 mm, angled, long	1 piece
R412018622	Push-in fitting Ø 4 mm - 5/32″, angled, short and push-in fitting Ø 4 mm - 5/32″, angled, long	1 piece
R412018623	Push-in fitting Ø 6 mm, angled, short Push-in fitting Ø 6 mm, angled, long	1 piece
R422002561	Push-in fitting Ø 3 mm, angled, short	10 piece
R422002569	Plug connector Ø 3 mm, angled, long	10 piece
R422002554	Push-in fitting Ø 4 mm - 5/32″, straight	10 piece
R422002562	Push-in fitting Ø 4 mm, 5/32″, angled, short	10 piece
R422002570	Push-in fitting Ø 4 mm, 5/32″, angled, long	10 piece
R422002555	Push-in fitting Ø 6 mm, straight	10 piece
R422002563	Push-in fitting Ø 6 mm, angled, short	10 piece
R422002571	Push-in fitting Ø 6 mm, angled, long	10 piece
R422002557	Push-in fitting Ø 8 mm, 5/16″, straight	10 piece
R422002565	Push-in fitting Ø 8 mm, 5/16″, angled, short	10 piece
R422002573	Push-in fitting Ø 8 mm, 5/16″, angled, long	10 piece
R422002944	Push-in fitting Ø 8 mm, angled, short Push-in fitting Ø 8 mm, angled, long	1 piece
R412021785	Push-in fitting 1/8″, straight	2 piece
R412018620	Push-in fitting 1/4″, straight	2 piece
R422002560	Push-in fitting 3/8″, straight	10 piece
R422102508	Push-in fitting Ø 12 mm, straight	2 piece
R422002559	Push-in fitting Ø 12 mm, straight	10 piece
R422002556	Push-in fitting 1/4″, straight	10 piece
R412021786	Push-in fitting 1/8″, straight	10 piece

Part No.	Housing material	
R412018617	Brass, nickel-plated	-
R412018618	Brass, nickel-plated	-
R412018619	Brass, nickel-plated	-
R412018621	Brass, nickel-plated	1)
R412018622	Brass, nickel-plated	-
R412018623	Brass, nickel-plated	-
R422002561	Brass, nickel-plated	-
R422002569	Brass, nickel-plated	-
R422002554	Brass, nickel-plated	-
R422002562	Brass, nickel-plated	-
R422002570	Brass, nickel-plated	-
R422002555	Brass, nickel-plated	-
R422002563	Brass, nickel-plated	-
R422002571	Brass, nickel-plated	-
R422002557	Brass, nickel-plated	-
R422002565	Polyamide, fiber-glass reinforced, black	-
R422002573	Polyarylamide, fiber-glass reinforced	-
R422002944	Polyamide, fiber-glass reinforced, black	-
R412021785	Brass, nickel-plated	-
R412018620	Brass, nickel-plated	-
R422002560	Brass, nickel-plated	-
R422102508	Brass, nickel-plated	1)
R422002559	Brass, nickel-plated	1)
R422002556	Brass, nickel-plated	-
R412021786	Brass, nickel-plated	-

1) Only for AV05 air connection, connection 1

Technical information

When using polyurethane tubing, we recommend using additional stiffener sleeves.
For push-in fittings, only use plug accessories made of plastic (polyamide) from our catalog.

Technical information

Material	
Housing	Brass, nickel-plated Polyamide, fiber-glass reinforced, black Polyarylamide, fiber-glass reinforced
Seal	Nitrile rubber

Dimensions

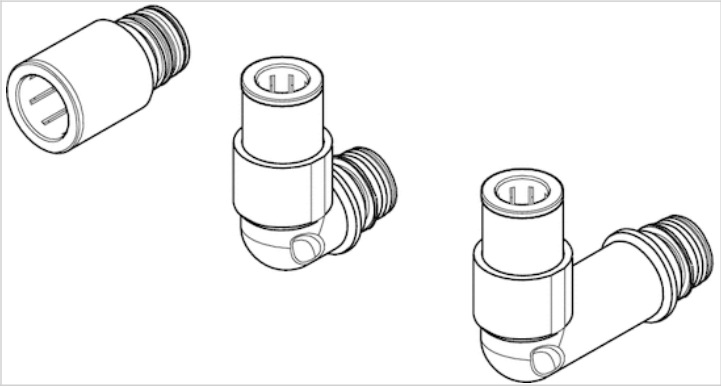

End plate left

- D-Sub plug, 25-pin, top, D-Sub plug, 44-pin, top
- for AV05

Ambient temperature min./max.	-10 ... 60 °C
Medium temperature min./max.	-10 ... 60 °C
electr. connection	D-Sub plug, 25-pin, top, D-Sub plug, 44-pin, top
Weight	See table below

Technical data

Part No.	Type	Delivery unit	Weight	Fig.
R412020076	Top connection	1 piece	0.045 kg	Fig. 1
R412020077	Side connection	1 piece	0.05 kg	Fig. 2

Scope of delivery: incl. 1 seal and 2 mounting screws

Technical information

The min. control pressure must be adhered to, since otherwise faulty switching and valve failure may result!
The pressure dew point must be at least 15 °C under ambient and medium temperature and may not exceed 3 °C .
The oil content of compressed air must remain constant during the life cycle.
Use only the approved oils from AVENTICS. Further information can be found in the “Technical information” document (available in the MediaCentre).

Technical information

Material	
Housing	Polyamide fiber-glass reinforced
Screws	Steel

Dimensions

Fig. 1

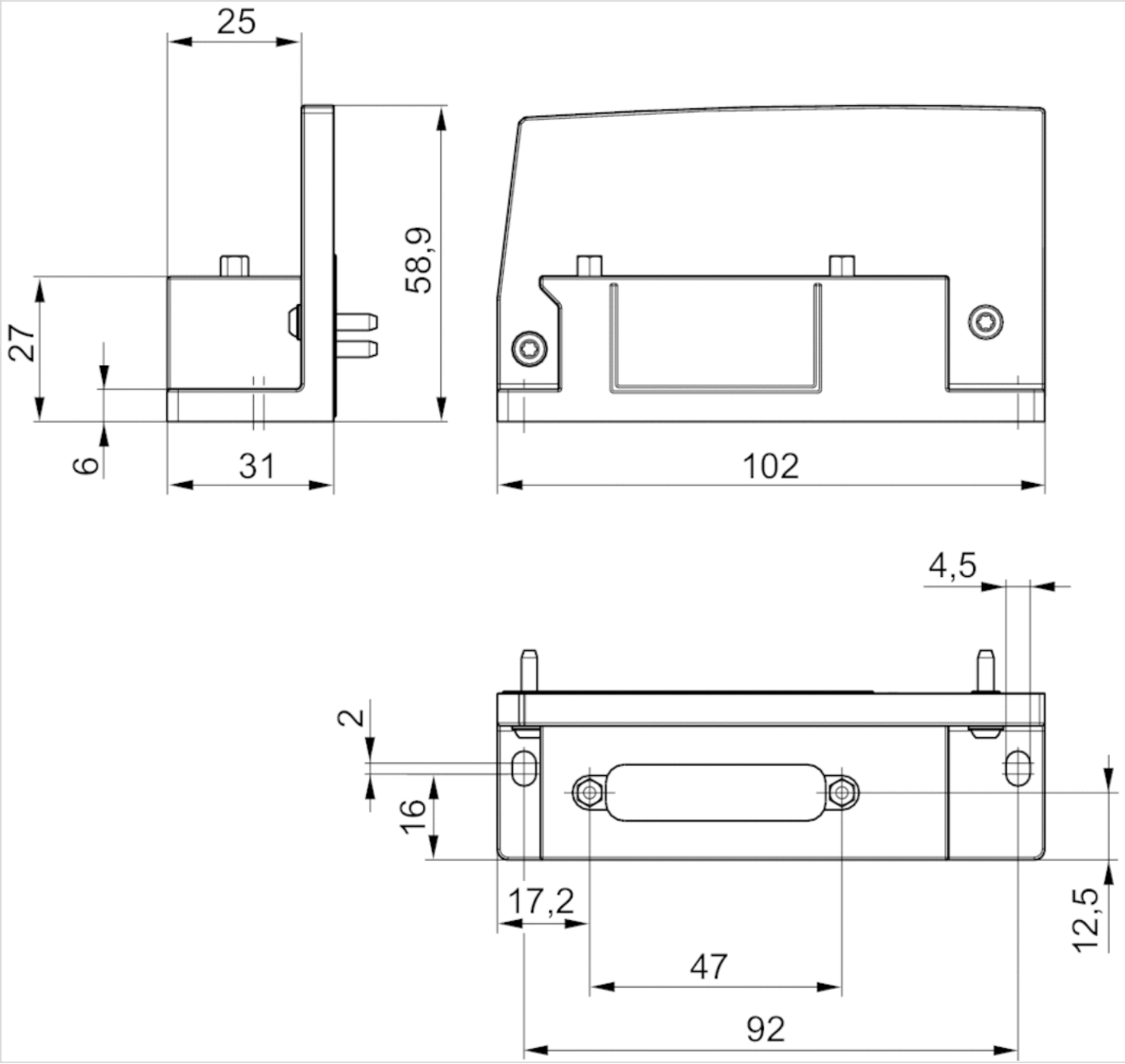

Fig. 2

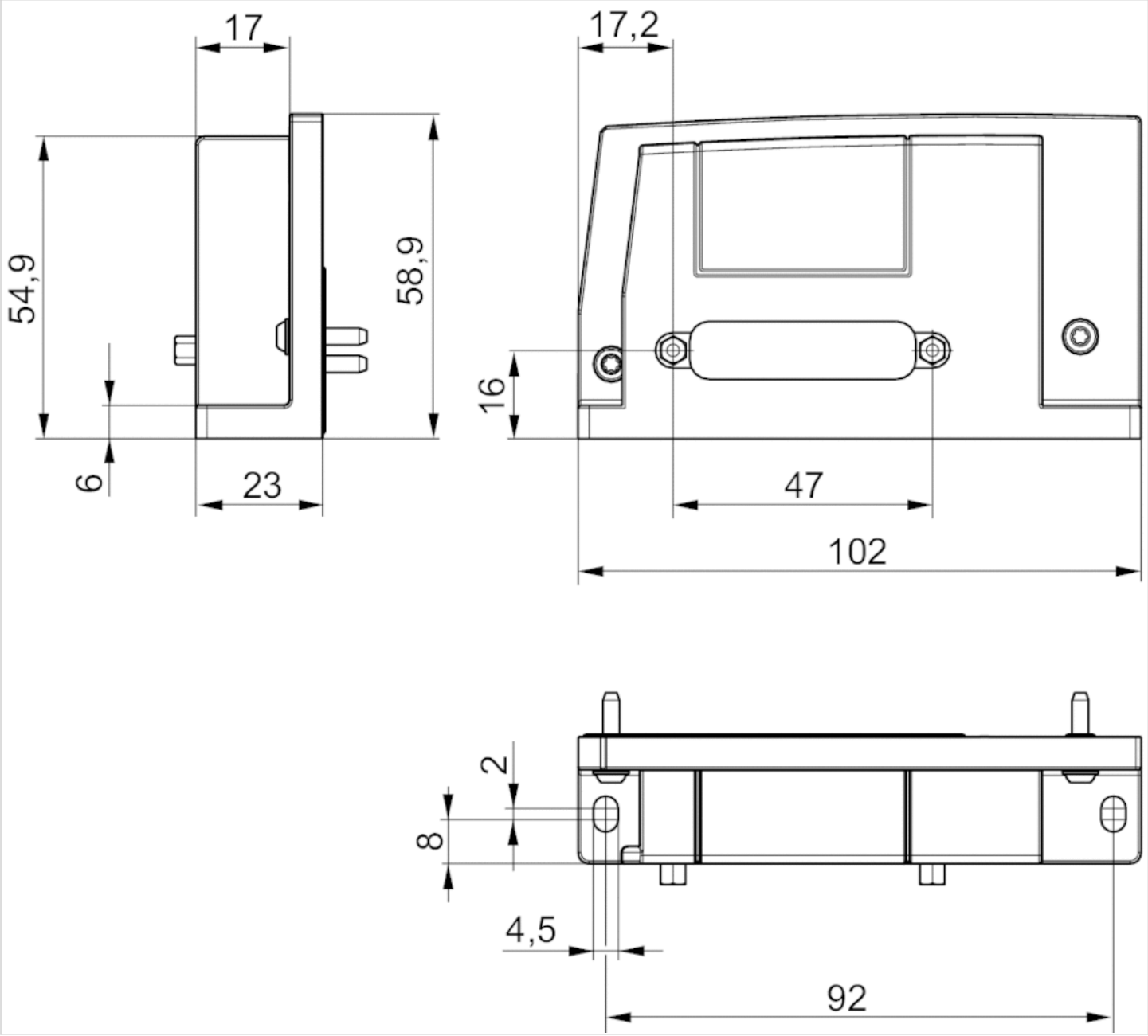

Extension kit transition plate AES - AV05

R412018216

Technical data

Industry
Industrial

Working pressure min.
-0.95 bar

Working pressure max
10 bar

Min. ambient temperature
-10 °C

Max. ambient temperature
60 °C

Scope of delivery
Adapter plate incl. 2x sealings, 4x Screws, 1x Tie rod nut, 1x circuit board, 1x Extension circuit board

Housing material
Polyamide fiber-glass reinforced

Seal material
Natural rubber

Part No.
R412018216

Technical information

The min. control pressure must be adhered to, since otherwise faulty switching and valve failure may result!

The pressure dew point must be at least 15 °C under ambient and medium temperature and may not exceed 3 °C .

The oil content of compressed air must remain constant during the life cycle.

Dimensions

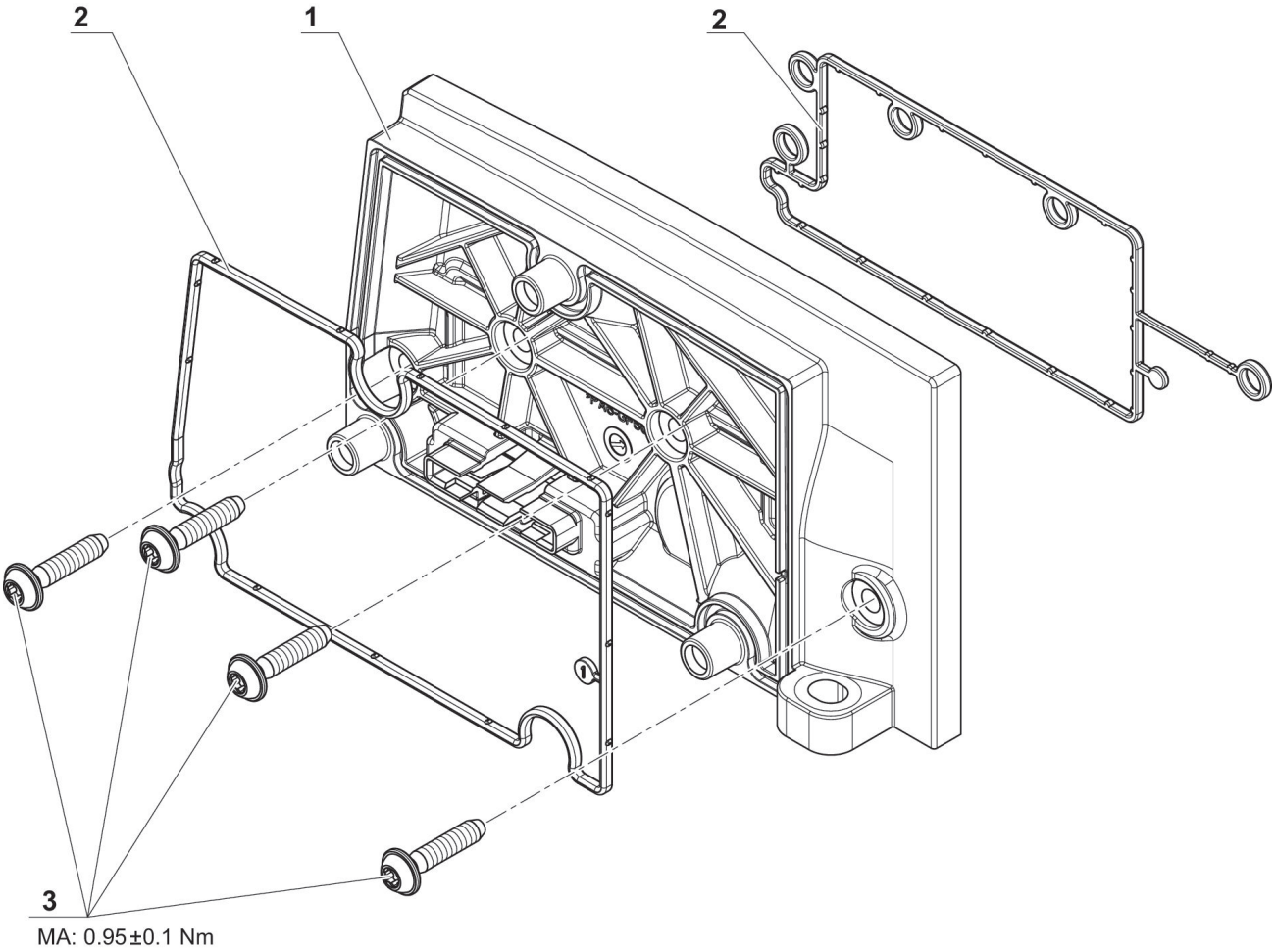

1) Transition plate
2) Seal
3) Screws

Mounting kit for DIN rail

- for AV03, AV05, AES, ES05

Technical data

Part No.
R412019468

Scope of delivery: 2 clamps, 4 screws M4x8 DIN 912, 1 screw M3x14 DIN 912, Note: The valve system should not be equipped with more than the maximum number of components. After maximum equipment of the valve system, we recommend no longer assembling the valve system on a DIN rail.

Technical information

Material	
Housing	Steel, chrome-plated

Dimensions

Dimensions

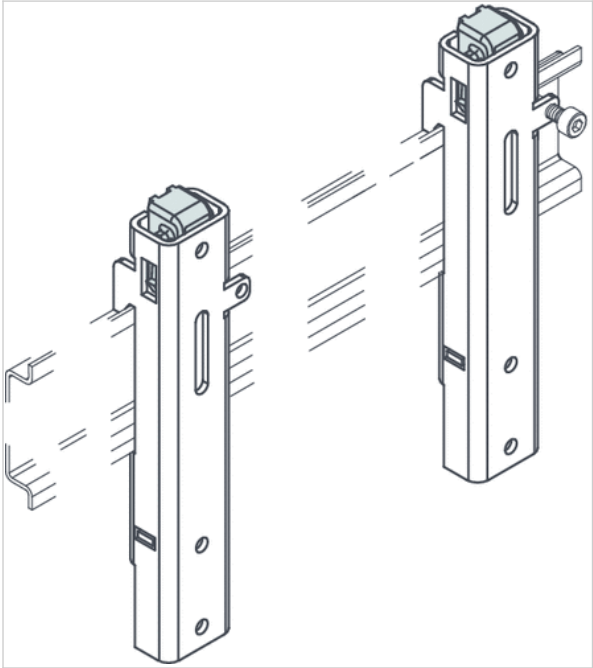

Assembly kit

- for AV

Technical data

Part No.	Type	Delivery unit
R422103091	Mounting bracket for mounting to the mounting plate	2 piece

Technical information

Material	
Housing	Stainless steel

Dimensions

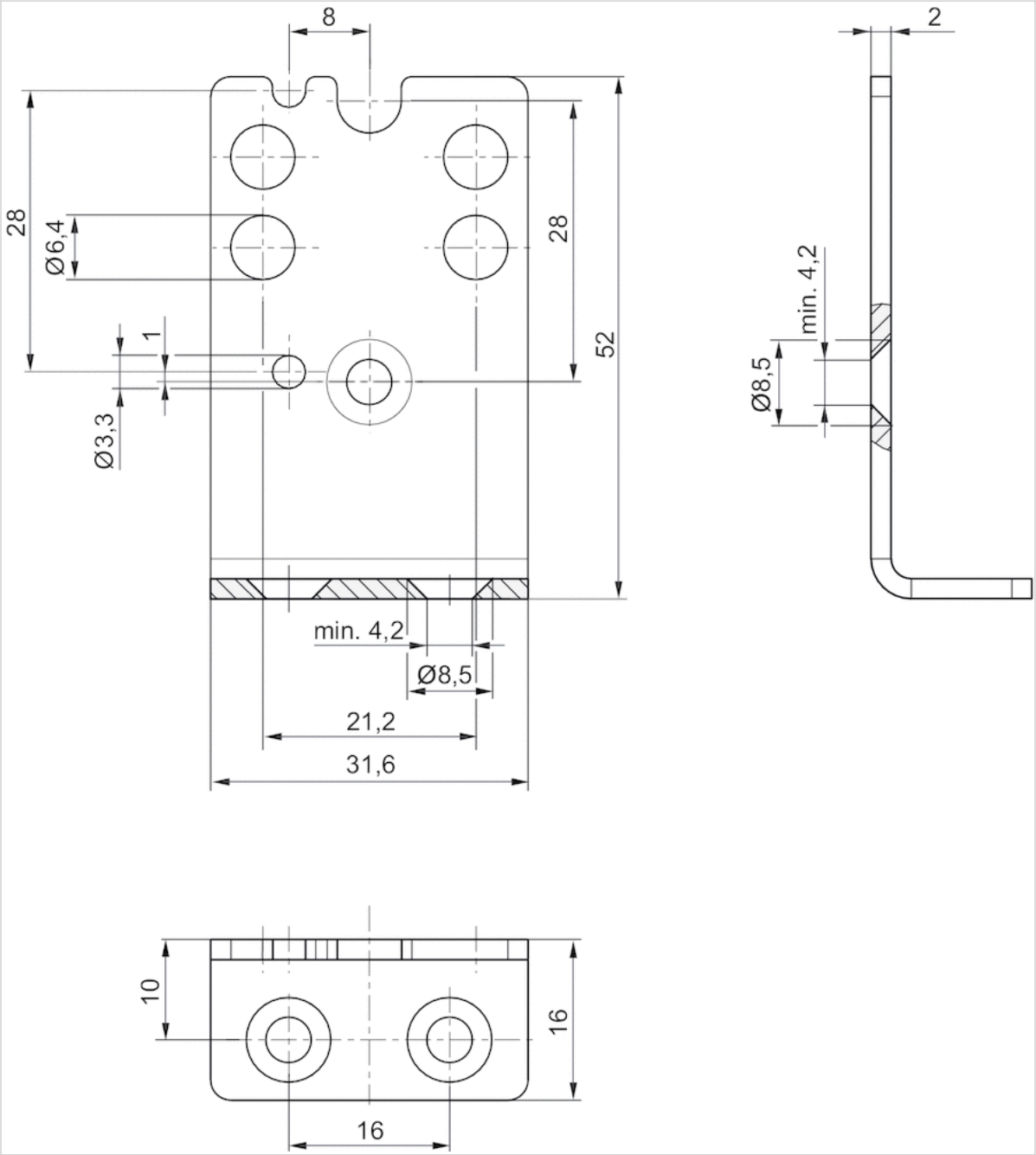

2 countersunk screws DIN 7991 A4 M4x8 for mounting on AV series pressure regulators are included in the scope of delivery. Countersunk screws for mounting on a mounting plate are not included in the scope of delivery.

Retaining bracket for intermediate mounting

- for AES, AV03, AV05

Technical data

Part No.	Type	Delivery unit
R412018339	Retaining brackets	10 piece

After three I/O modules or 8 valves, mount a retaining bracket (R412018339) to fasten the entire unit to the mounting surface., Screws not included in scope of delivery, The max. permissible space between the retaining brackets is 150 mm .

Technical information

Material	
Housing	Stainless steel

Dimensions

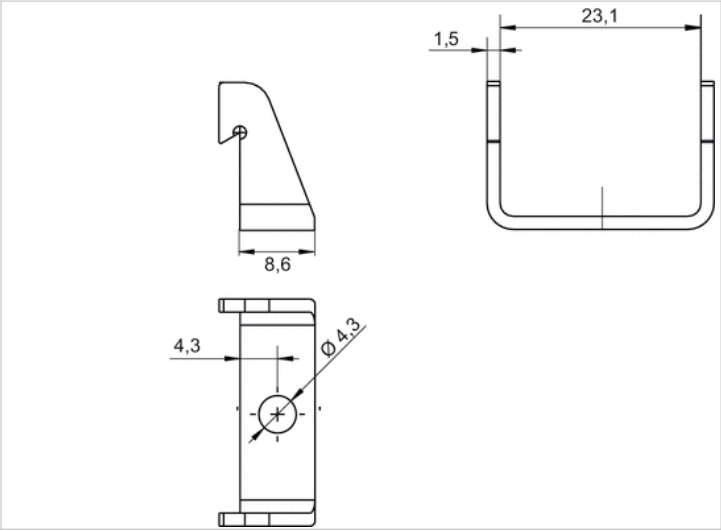

Name plates, AV-valves front

- for AV03, AV05, AES

Weight 0.014 kg

Technical data

Part No.	Type	Delivery unit
R412019552	Name plates	150 piece

Technical information

Material	
Housing	Polyamide

Dimensions

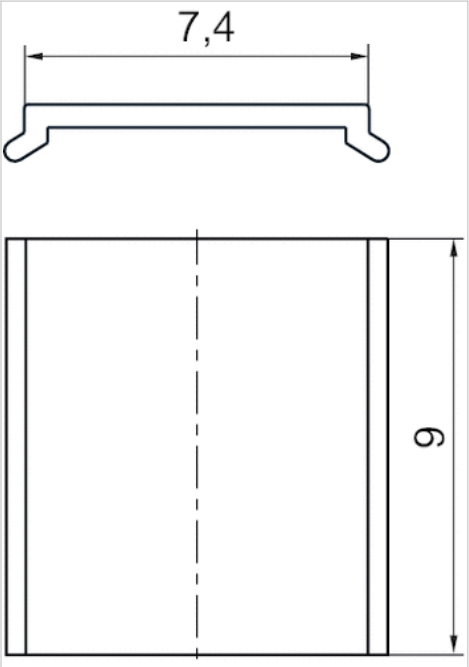

Name plates, AV-valves, AES bus coupler top

- for AV03, AV05, AES

Weight 0.014 kg

Technical data

Part No.	Type	Delivery unit
R422100889	Name plates	24 piece

Technical information

Material	
Housing	Polycarbonate

Dimensions

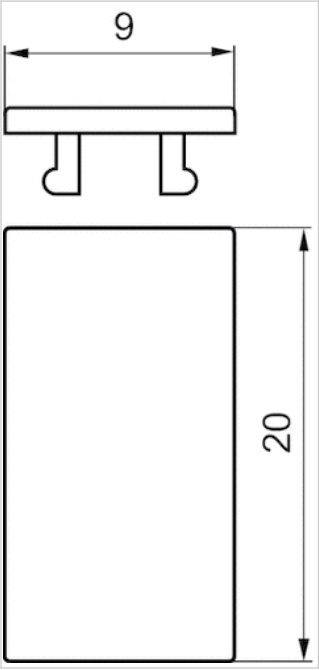

Name plates, AV-BP base plates bottom

- for AV03-BP, AV05-BP

Weight 0.014 kg

Technical data

Part No.	Type	Scope of delivery
R412026461	Name plates	20 Piece

Technical information

Material	
Housing	Polyamide

Dimensions

Dimensions

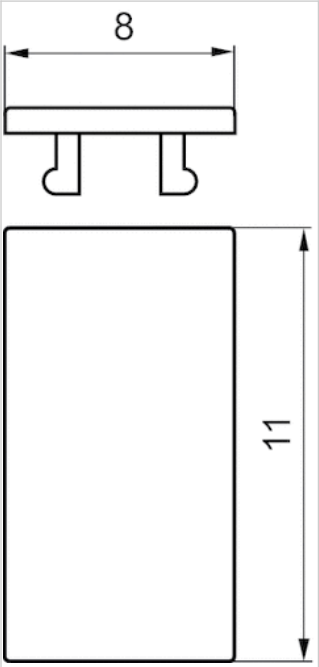

Sealing kit

- for AV-BP

Ambient temperature min./max. -10 ... 60 °C

Technical data

Part No.	Type	Scope of delivery
R412026466	Sealing kit sealing tape 1.25 m	5 Piece

Technical information

Material	
Housing	Ethylene propylene diene monomer rubber

Accessories

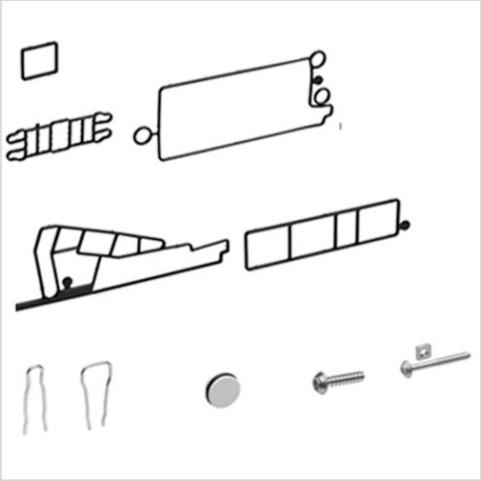

Ambient temperature min./max.	-10 ... 60 °C
Medium	Compressed air

Technical data

Part No.	Position	Type	Scope of delivery	
R412018338	1	Valve seals	10 piece	1)
R412020084	1	Valve seals	10 piece	2)
R412018344	2	Seals for left end plate	10 piece	1)
R412020080	2	Seals for left end plate	10 piece	2)
R412018345	3	Seals for base plate	10 piece	1)
R412020082	3	Seals for base plate	10 piece	2)
R412018346	4	Seals for function modules	10 piece	1)
R412020081	4	Seals for function modules	10 piece	2)
R412018746	5	Retaining clips for supply plate	10 piece	1)
R412020075	5	Retaining clips for supply plate	10 piece	2)
R412018747	6	Retaining clips for base plate	10 piece	3)
R412018351	7	Sealing cap for right end plate	5 piece	3)
R412015467	8	Screws for left end plate	10 piece	3)
R412018336	9	Mounting screw for valve	10 piece	3)

1) AV03
2) AV05
3) AV03 / AV05

Dimensions

Overview drawing

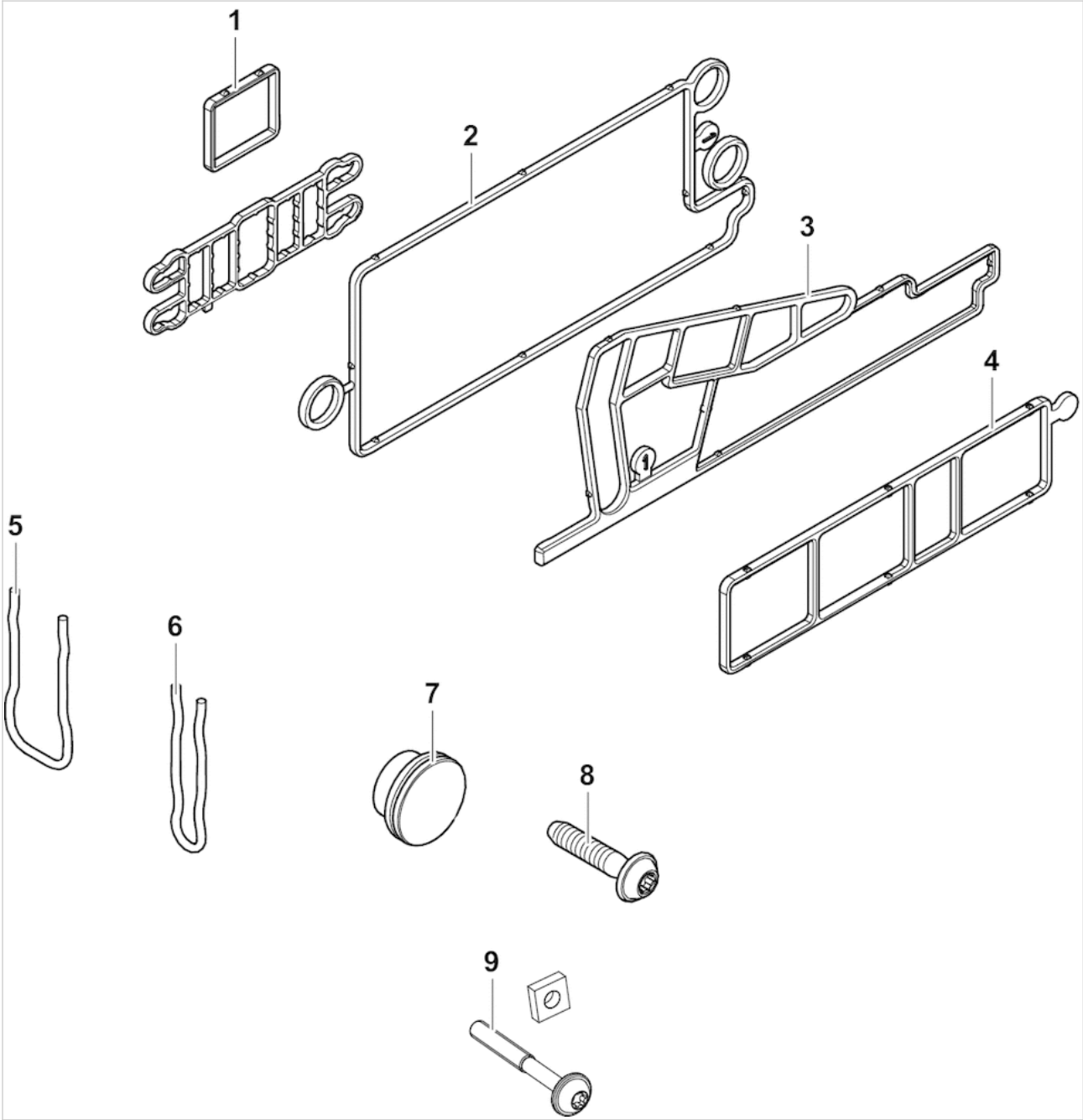

Name plates, AES E/A-module

- for AES

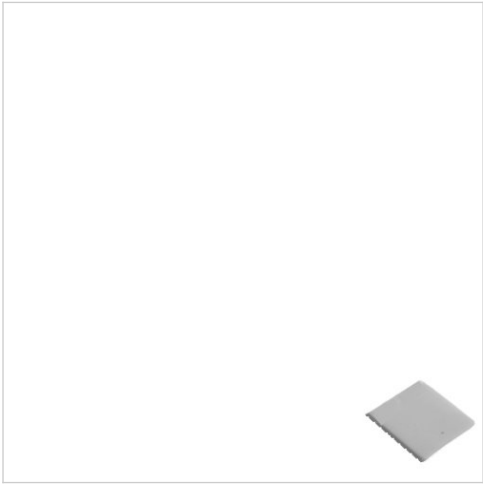

Weight	0.014 kg

Technical data

Part No.	Type	Delivery unit
R412018192	Name plates	60 piece

Technical information

Material	
Housing	Polyamide

Dimensions

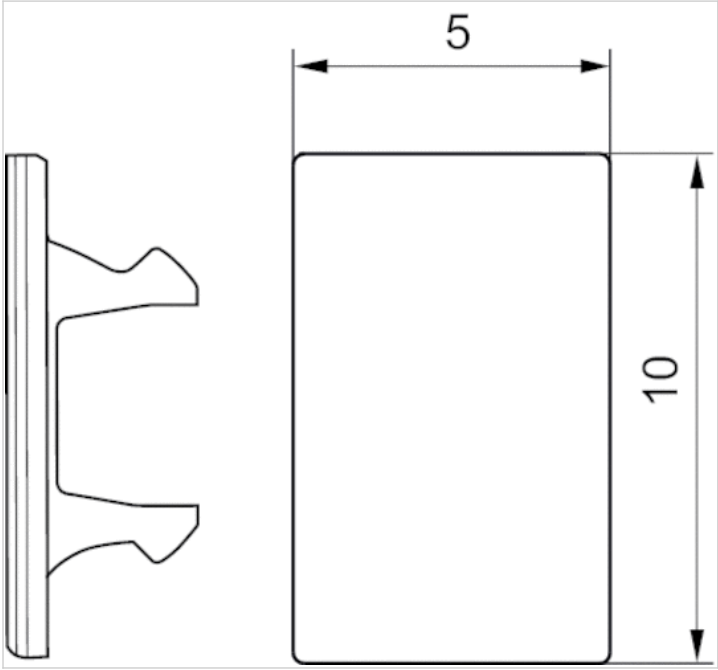

Protective cap, series CON-RD

- M8x1

Ambient temperature min./max.	-40 ... 85 °C
Protection class	IP67
Weight	0.001 kg

Technical data

Part No.	Type	Scope of delivery
R412003493	M8x1	25

Technical information

Material	
Housing	Polyamide

Dimensions

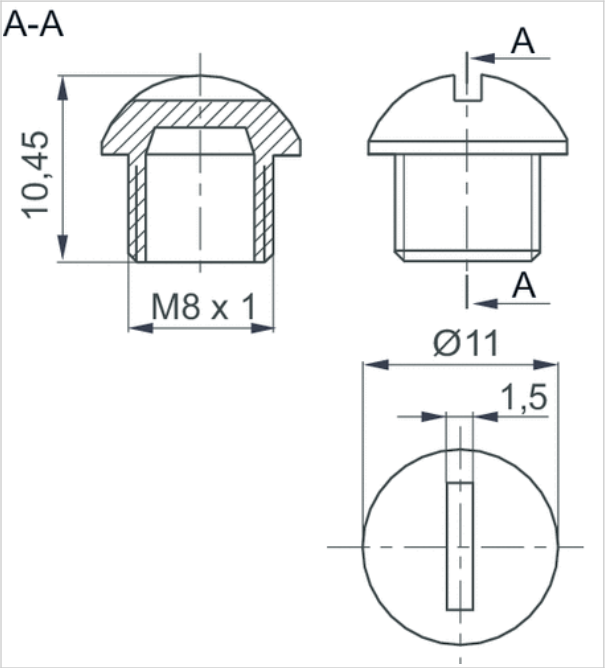

Protective cap, series CON-RD

- M12x1

Ambient temperature min./max.	-40 ... 85 °C
Protection class	IP67
Weight	0.001 kg

Technical data

Part No.	Type	Delivery unit
1823312001	M12x1	50 piece

Technical information

Material	
Housing	Polyamide

Dimensions

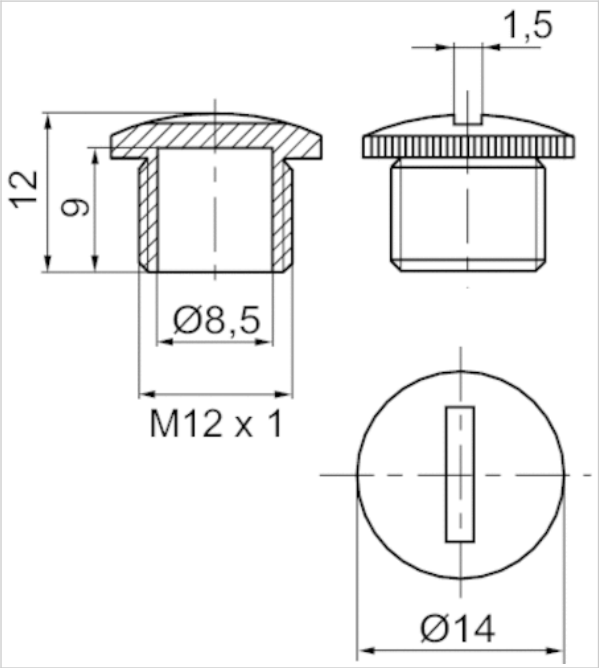

End plate left

- for AES

Ambient temperature min./max.	-10 ... 60 °C
Weight	0.033 kg

Technical data

Part No.	Type
R412015398	End plate left

Delivery contents: incl. 2 spring clamp elements

Technical information

The min. control pressure must be adhered to, since otherwise faulty switching and valve failure may result!
The pressure dew point must be at least 15 °C under ambient and medium temperature and may not exceed 3 °C .
The oil content of compressed air must remain constant during the life cycle.
Use only the approved oils from AVENTICS. Further information can be found in the “Technical information” document (available in the MediaCentre).

Technical information

Material	
Base plate	Polyamide fiber-glass reinforced

Dimensions

Dimensions

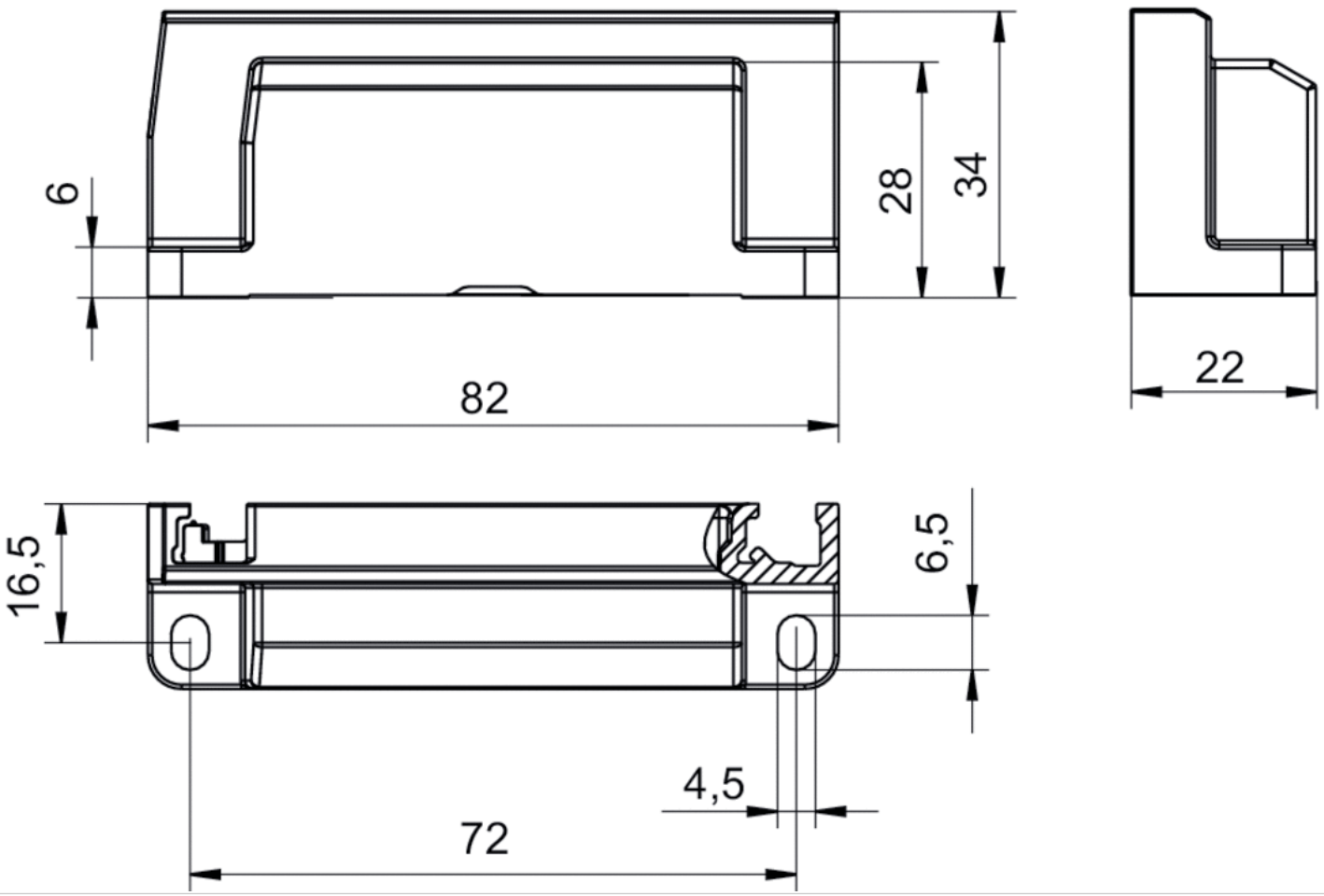

End plate right

- for AES

Ambient temperature min./max.	-10 ... 60 °C
Weight	0.039 kg

Technical data

Part No.	Suitable for Series
R412015741	Stand-Alone variant AES

Scope of delivery incl. seal and mounting screws

Technical information

The min. control pressure must be adhered to, since otherwise faulty switching and valve failure may result!
The pressure dew point must be at least 15 °C under ambient and medium temperature and may not exceed 3 °C .
The oil content of compressed air must remain constant during the life cycle.
Use only the approved oils from AVENTICS. Further information can be found in the “Technical information” document (available in the MediaCentre).

Technical information

Material	
Base plate	Polyamide fiber-glass reinforced

Dimensions

Dimensions

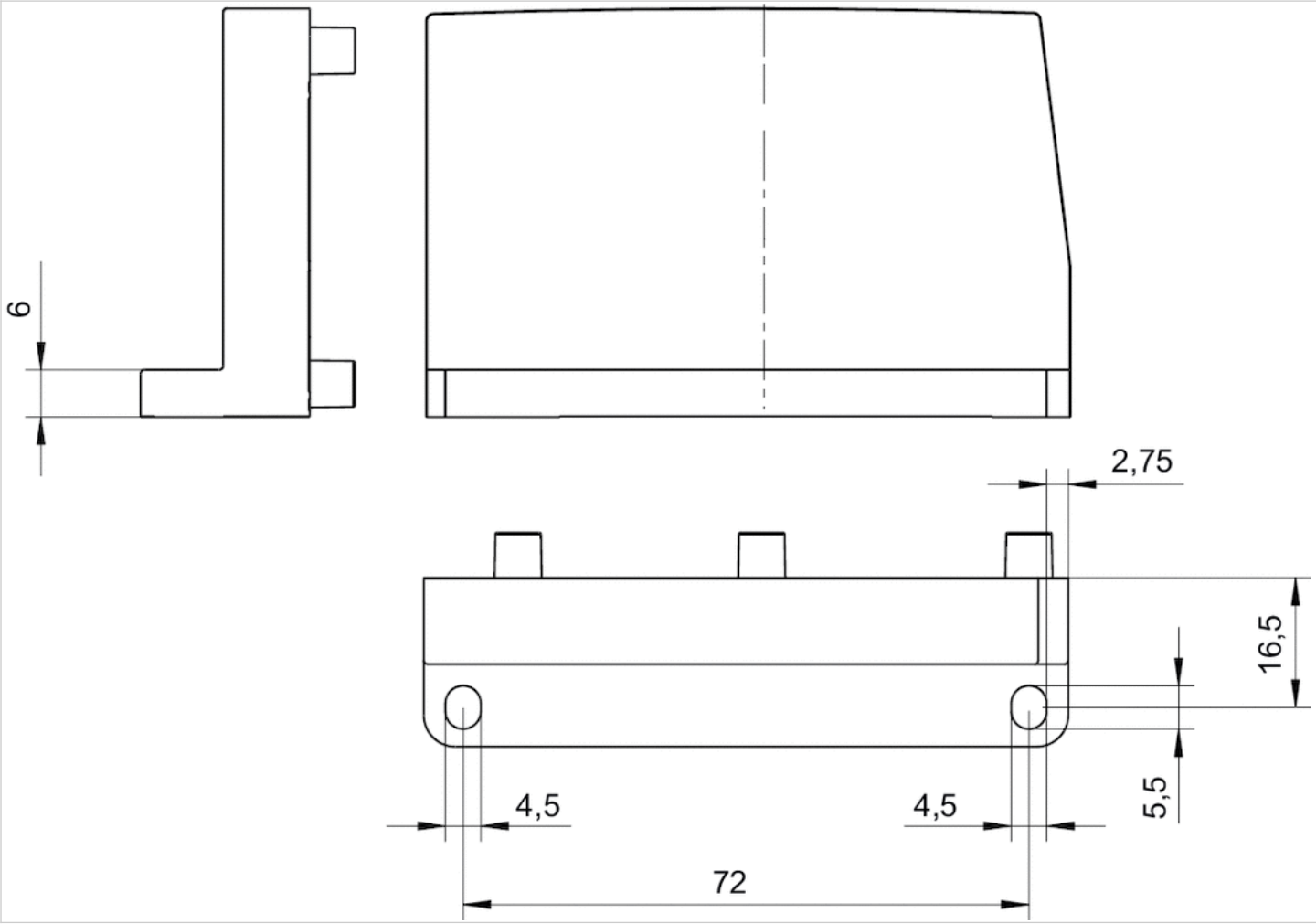

Retaining bracket for intermediate mounting

- for AES, AV03, AV05

Technical data

Part No.	Type	Delivery unit
R412018339	Retaining brackets	10 piece

After three I/O modules or 8 valves, mount a retaining bracket (R412018339) to fasten the entire unit to the mounting surface., Screws not included in scope of delivery, The max. permissible space between the retaining brackets is 150 mm .

Technical information

Material	
Housing	Stainless steel

Dimensions

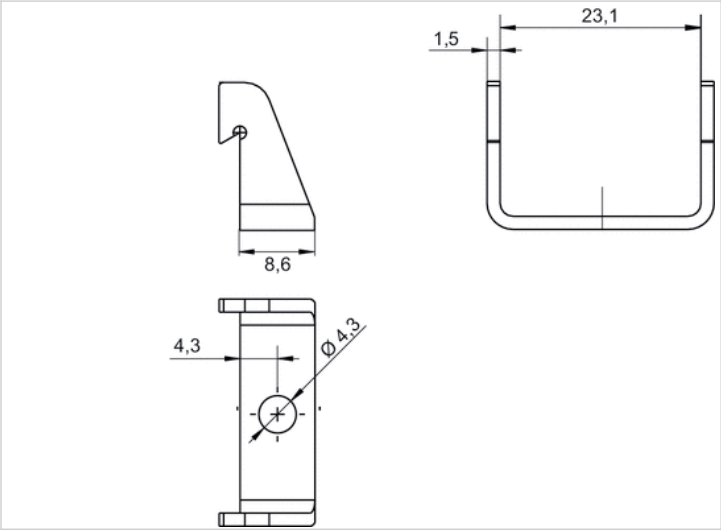

Mounting bracket

R412020083

Mechanical accessories

Technical data

Industry	Industrial
For series	AV03 AV05
Delivery unit	10 piece
Weight	0.047 kg
Housing material	Stainless Steel
Part No.	R412020083

Dimensions in mm

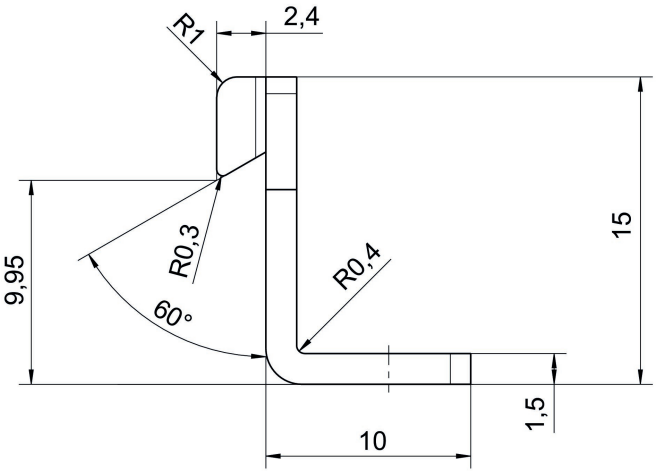

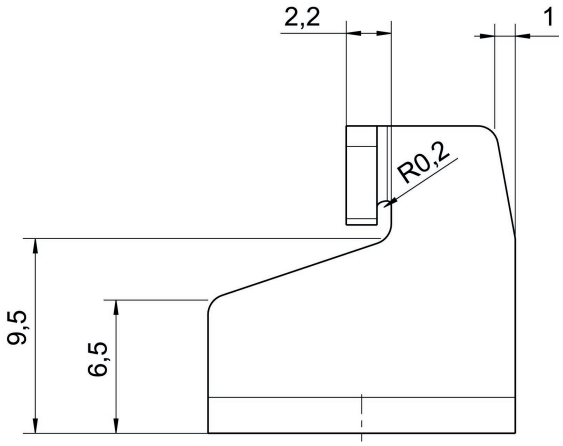

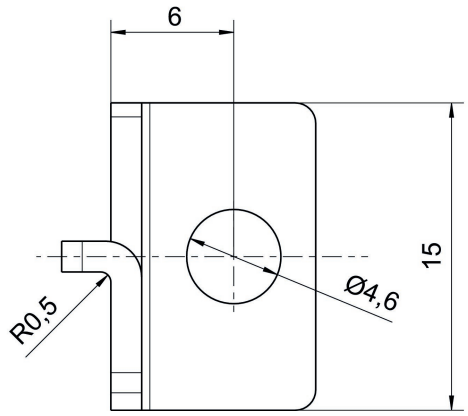

Spring clamp element

- for AES

Technical data

Part No.	Type	Suitable for	Delivery unit
R412015400	Spring clamp element	For connecting fieldbus components	10 piece

Technical information

Material	
Housing	Steel

Dimensions

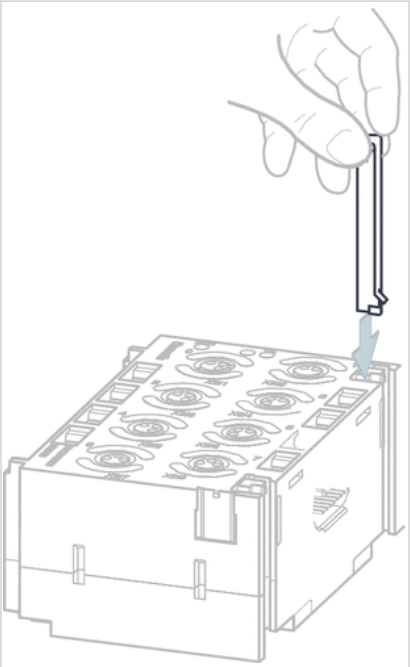

Release tool

- for AV

Ambient temperature min./max. -10 ... 60 °C

Technical data

Part No.	Type
R422004106	Ø 4, Ø 6, Ø 8, Ø 10

Dimensions

Dimensions

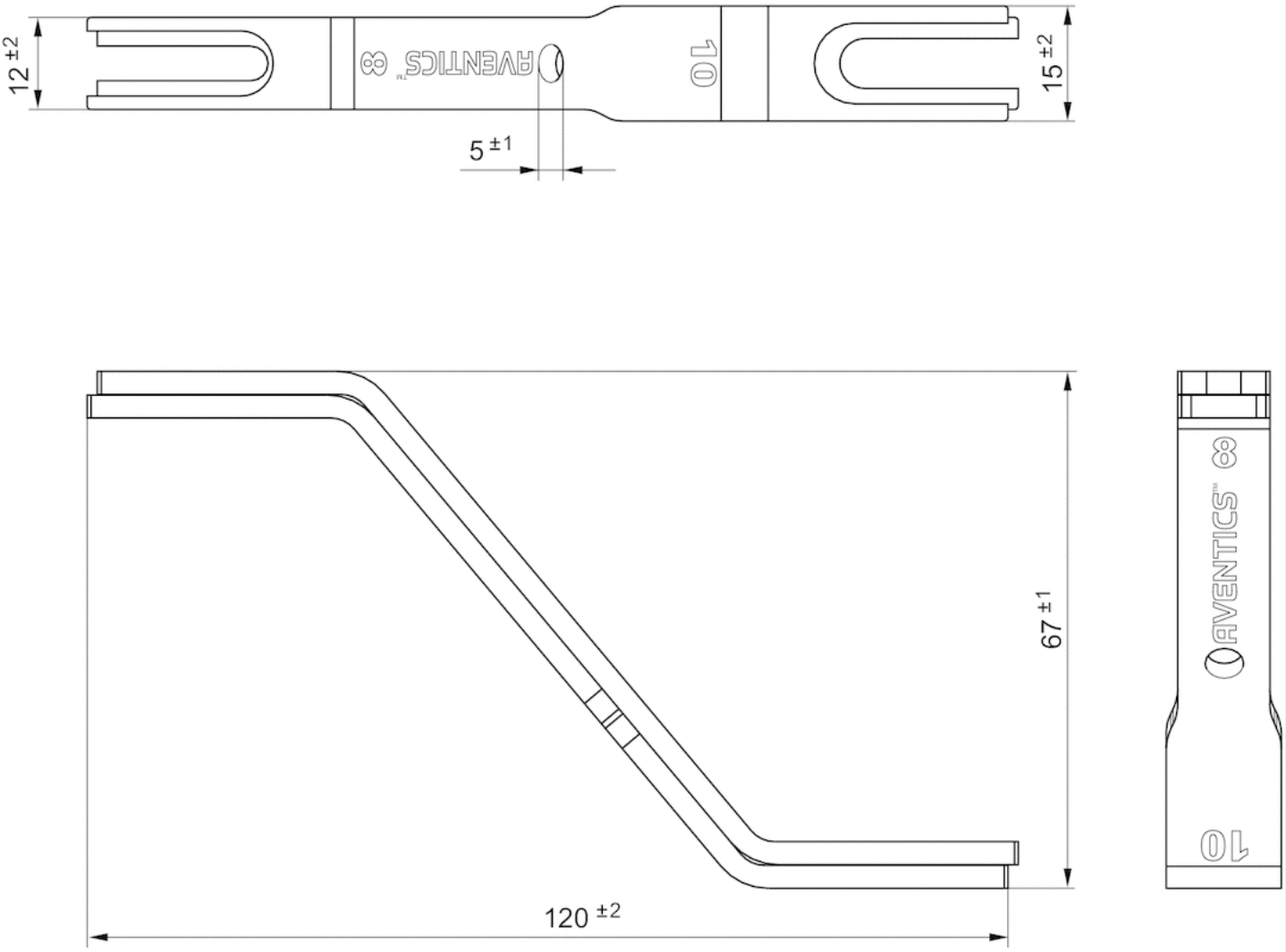

Round plug connector, Series CON-RD

- Plug, M12x1, 4-pin, D-coded, straight, 180°
- for Ethernet, EtherNET/IP, EtherCAT, POWERLINK, sercos III
- shielded

Connection type	Thread cutting
Ambient temperature min./max.	-40 ... 85 °C
Operational voltage	48 V AC/DC
Protection class	IP67
Weight	0.41 kg

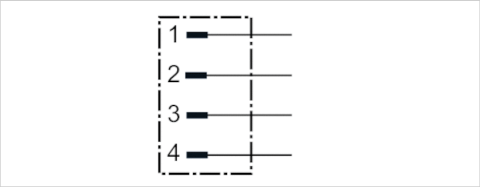

Technical data

Part No.	Max. current	suitable cable-Ø min./max
R419801401	4 A	6 / 8 mm

Technical information

The specified protection class is only valid in assembled and tested state.

Technical information

Material	
Housing	Brass, nickel-plated

Dimensions

Dimensions

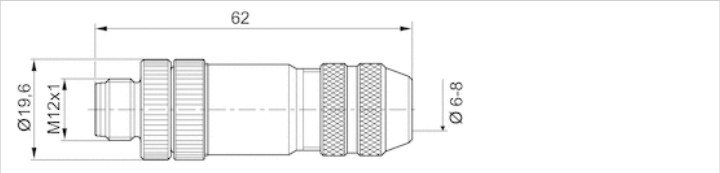

Pin assignments

Plug pin assignment

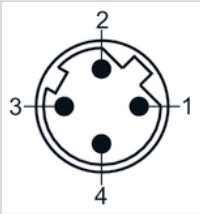

Round plug connector, Series CON-RD

- Plug, M12x1, 5-pin, A-coded, straight, 180°
- for CANopen, DeviceNet
- UL (Underwriters Laboratories)
- shielded

Connection type	Screws
Ambient temperature min./max.	-40 ... 85 °C
Operational voltage	48 V AC/DC
Protection class	IP67
Weight	0.48 kg

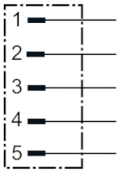

Technical data

Part No.	Max. current	suitable cable-Ø min./max
8942051612	4 A	6 / 8 mm

Technical information

The specified protection class is only valid in assembled and tested state.

Technical information

Material	
Housing	Brass, nickel-plated

Dimensions

Dimensions

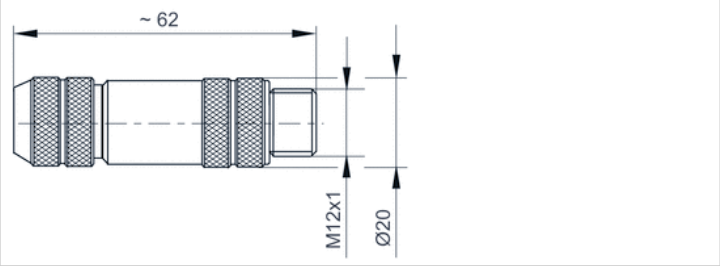

Pin assignments

Plug pin assignment

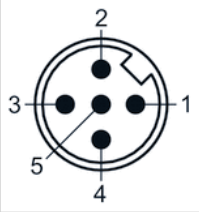

Round plug connector, Series CON-RD

- Plug, M12x1, 5-pin, B-coded, straight, 180°
- for PROFIBUS DP
- UL (Underwriters Laboratories)
- shielded

Connection type	Screws
Ambient temperature min./max.	-25 ... 85 °C
Operational voltage	48 V AC/DC
Protection class	IP67
Weight	0.06 kg

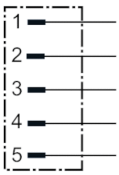

Technical data

Part No.	Max. current	suitable cable-Ø min./max
8941054054	4 A	4 / 9 mm

Technical information

The specified protection class is only valid in assembled and tested state.

Technical information

Material	
Housing	Brass, nickel-plated
Seals	Fluorocarbon caoutchouc

Dimensions

Dimensions

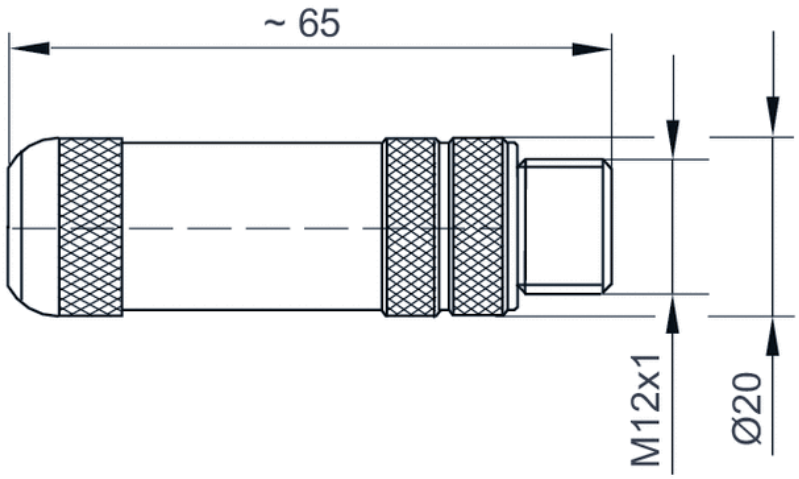

Pin assignments

Plug pin assignment

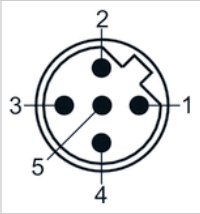

Round plug connector, Series CON-RD

- Socket, M12x1, 4-pin, A-coded, straight, 180°
- UL (Underwriters Laboratories)
- unshielded

Connection type	Screws
Ambient temperature min./max.	-25 ... 90 °C
Operational voltage	48 V AC/DC
Protection class	IP67
Weight	0.029 kg

The delivered product may vary from that in the illustration.

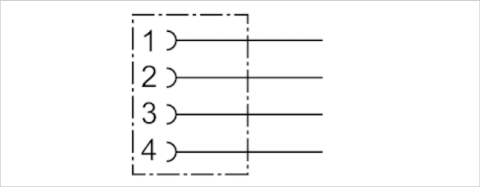

Technical data

Part No.	Max. current	suitable cable-Ø min./max
8941054324	4 A	4 mm

Technical information

The specified protection class is only valid in assembled and tested state.

Technical information

Material	
Housing	Polybutyleneterephthalate
Seals	Fluorocarbon caoutchouc

Dimensions

Dimensions

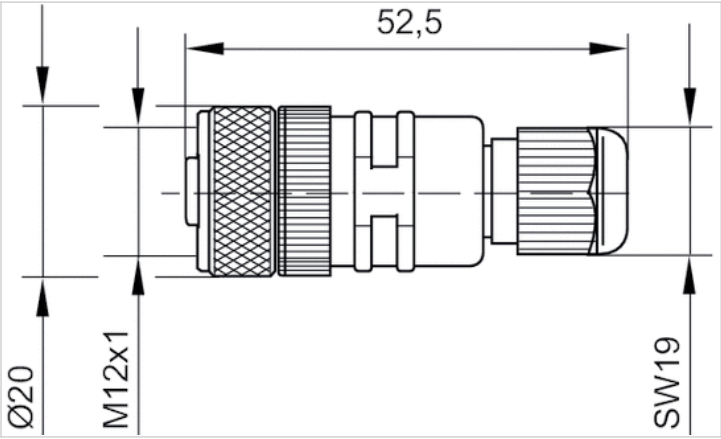

Pin assignments

Pin assignment, socket

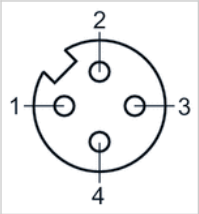

Round plug connector, Series CON-RD

- Socket, M12x1, 4-pin, A-coded, angled, 90°
- unshielded

Connection type	Screws
Ambient temperature min./max.	-25 ... 90 °C
Operational voltage	48 V AC/DC
Protection class	IP67
Weight	0.027 kg

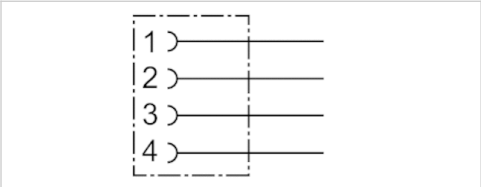

Technical data

Part No.	Max. current	suitable cable-Ø min./max
8941054424	4 A	4 mm

Technical information

The specified protection class is only valid in assembled and tested state.

Technical information

Material	
Housing	Polybutyleneterephthalate
Seals	Fluorocarbon caoutchouc

Dimensions

Dimensions

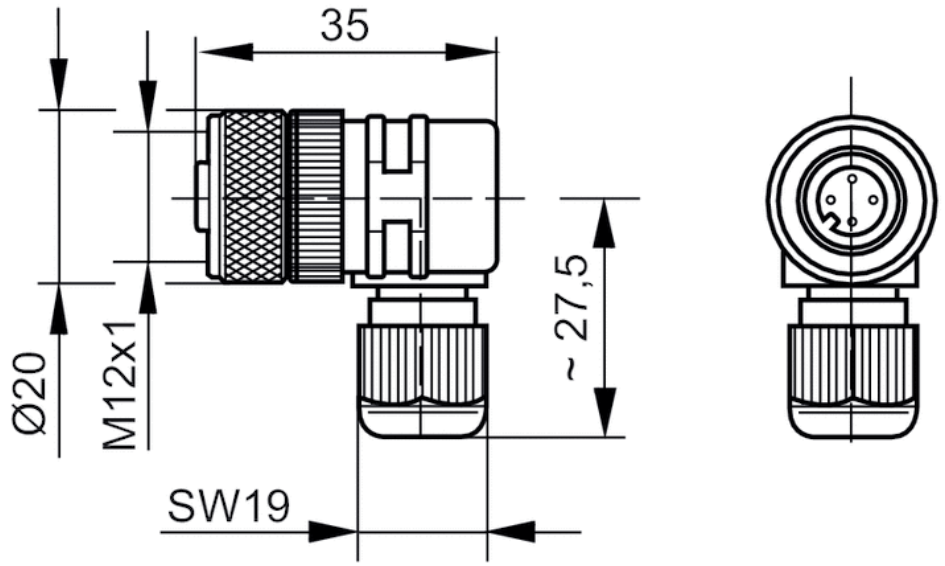

Pin assignments

Pin assignment, socket

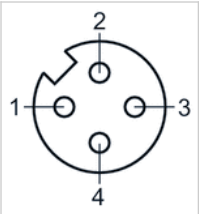

Rundsteckverbinder, Serie CON-RD

8942051602

Rundsteckverbinder, Serie CON-RD

- Rundsteckverbinder zum Selbstkonfektionieren
- M8x1, M12x1, M23, 7/8"
- Rundsteckverbinder-Adapter

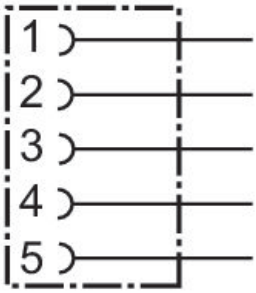

Technische Daten

Branche
Industrie

Bauart
Rundsteckverbinder

Anschlussart
Schrauben

Protokoll
CANopen
DeviceNet

Zertifikate
UL (Underwriters Laboratories)

Schirmung
geschirmt

Umgebungstemperatur min.
-40 °C

Umgebungstemperatur max.
85 °C

Strom, max.
4 A

Schutzart
IP67

Betriebsspannung
48 V AC/DC

Elektrischer Anschluss 1, Typ
Buchse

Elektrischer Anschluss 1, Gewindegröße
M12x1

Elektrischer Anschluss 1, Anzahl Pole
5-polig

Elektrischer Anschluss 1, Codierung
A-codiert

Kabelabgang
gerade

Kabelabgang Winkel
180°

Gewicht
0.051 kg

Werkstoff

Werkstoff Gehäuse
Messing

Materialnummer
8942051602

Technische Informationen

Die angegebene Schutzart gilt ausschließlich in montiertem und geprüftem Zustand.

Abmessungen

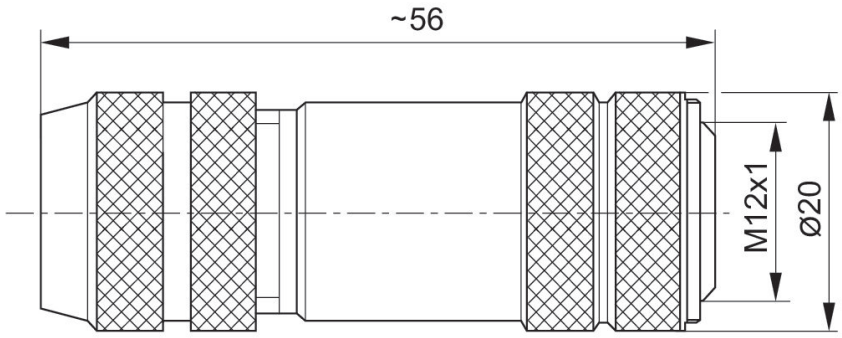

Polbild Buchse

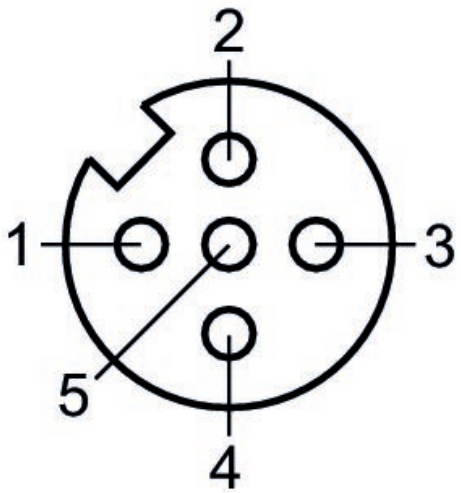

Round plug connector, Series CON-RD

- Socket, M12x1, 5-pin, B-coded, straight, 180°
- for PROFIBUS DP
- UL (Underwriters Laboratories)
- shielded

Connection type	Screws
Ambient temperature min./max.	-40 ... 85 °C
Operational voltage	48 V AC/DC
Protection class	IP67
Weight	0.06 kg

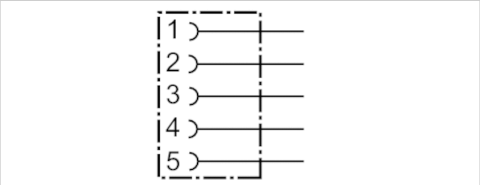

Technical data

Part No.	Max. current	suitable cable-Ø min./max
8941054044	4 A	6 / 8 mm

Technical information

The specified protection class is only valid in assembled and tested state.

Technical information

Material	
Housing	Brass, nickel-plated
Seals	Fluorocarbon caoutchouc

Dimensions

Dimensions

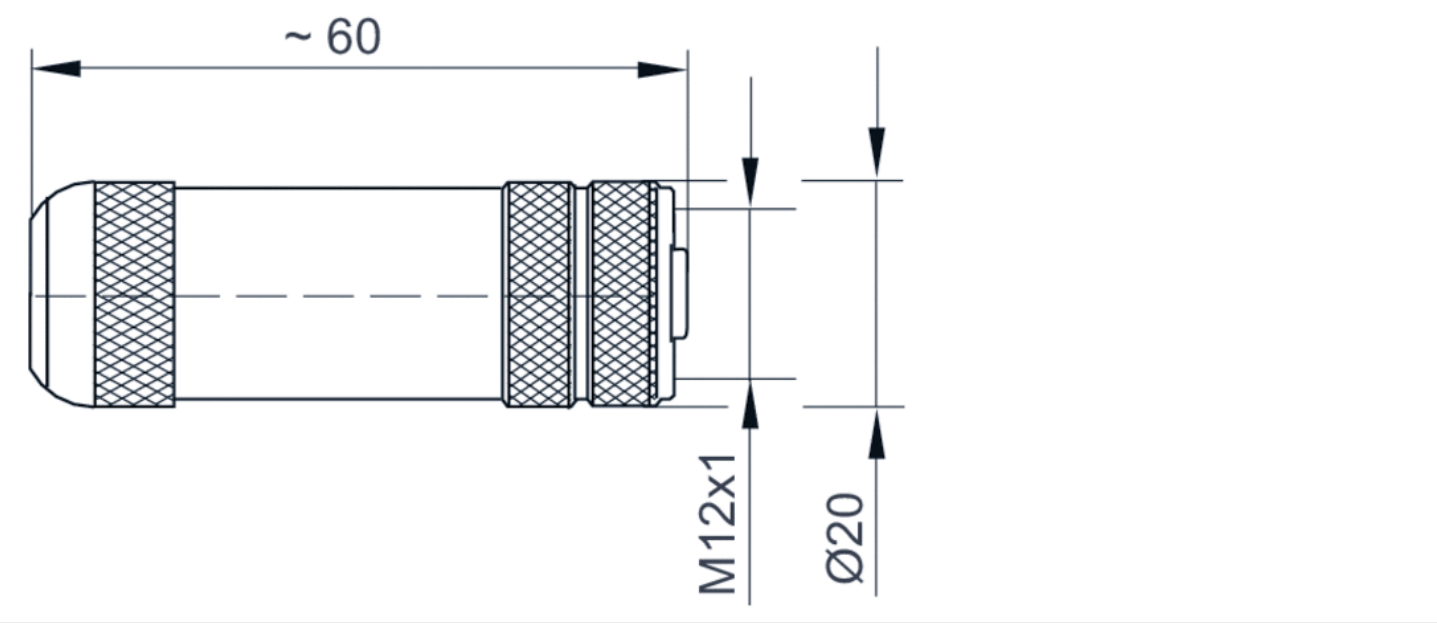

Pin assignments

Pin assignment, socket

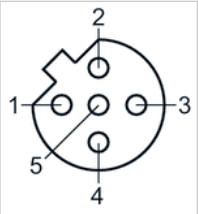

Data final plug, Series CON-RD

- Plug, M12x1, 4-pin, B-coded, straight, 180°
- for PROFIBUS DP

Ambient temperature min./max.	-25 ... 80 °C
Protection class	IP67
Weight	0.013 kg

Technical data

Part No.
8941054064

Technical information

The specified protection class is only valid in assembled and tested state.
PROFIBUS DP bus termination plug

Technical information

Material	
Housing	Thermoplastic elastomer

Dimensions

Dimensions

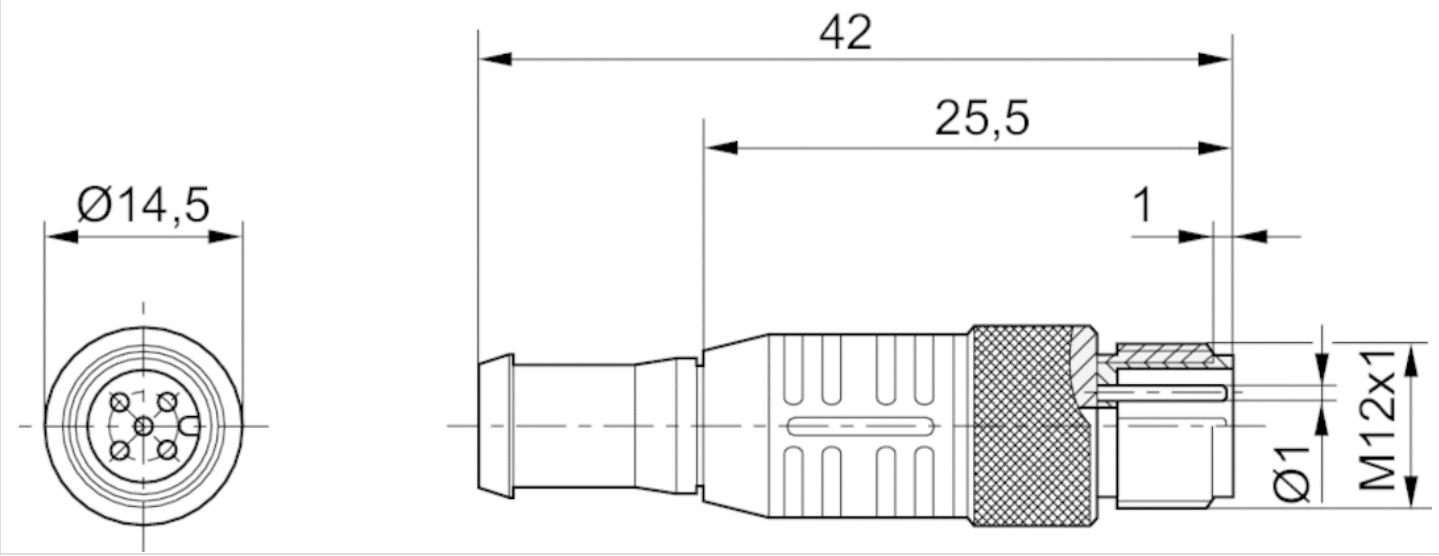

Pin assignments

Plug pin assignment

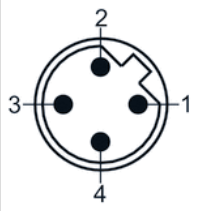

Data final plug, Series CON-RD

- Plug, M12x1, 5-pin, A-coded, straight, 180°
- for CANopen, DeviceNet

Ambient temperature min./max.	0 ... 60 °C
Protection class	IP67
Weight	0.011 kg

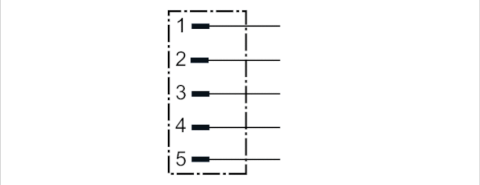

Technical data

Part No.
8941054264

Technical information

The specified protection class is only valid in assembled and tested state.

Technical information

Material	
Housing	Thermoplastic elastomer

Dimensions

Dimensions

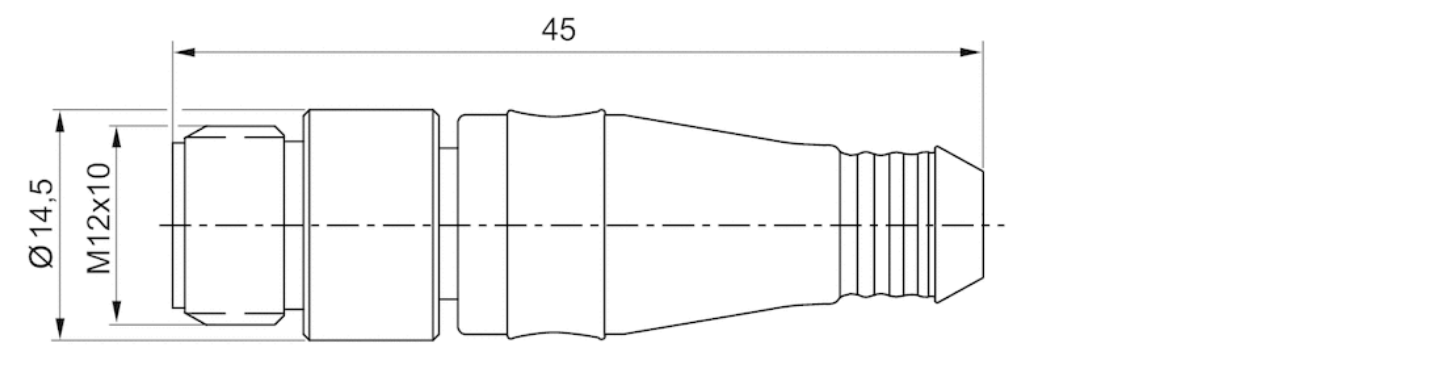

Pin assignments

Plug pin assignment

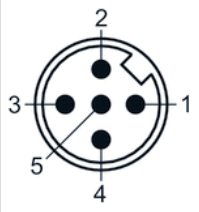

Round plug connector, Series CON-RD

- Plug, M8x1, 3-pin, A-coded, straight, 180°
- unshielded

Connection type	Screws
Ambient temperature min./max.	-40 ... 85 °C
Operational voltage	48 V AC/DC
Protection class	IP67
Weight	0.01 kg

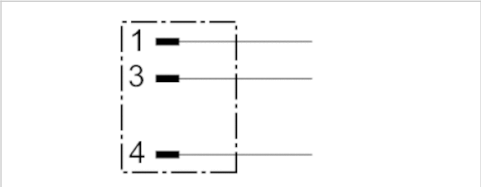

Technical data

Part No.	Max. current	Contact assignment	suitable cable-Ø min./max
R412021676	4 A	3	3.5 / 5 mm

Technical information

The specified protection class is only valid in assembled and tested state.

Technical information

Material	
Housing	Polyamide

Dimensions

Dimensions

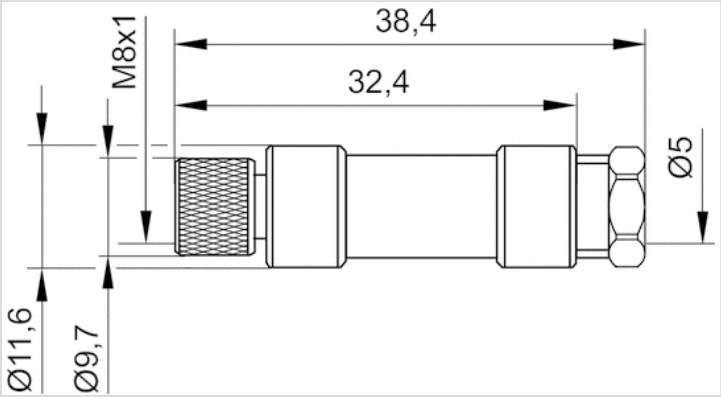

Pin assignments

Plug pin assignment

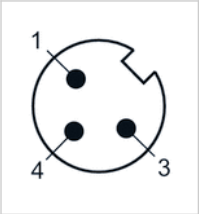

Round plug connector, Series CON-RD

- Plug, M8x1, 3-pin, A-coded, angled, 90°
- unshielded

Connection type	Screws
Ambient temperature min./max.	-25 ... 85 °C
Operational voltage	48 V AC/DC
Protection class	IP67
Weight	0.01 kg

The delivered product may vary from that in the illustration.

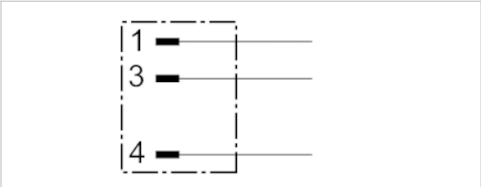

Technical data

Part No.	Max. current	Contact assignment	suitable cable-Ø min./max
R412021677	4 A	3	3.5 / 6 mm

Technical information

The specified protection class is only valid in assembled and tested state.

Technical information

Material	
Housing	Polyamide

Dimensions

Dimensions

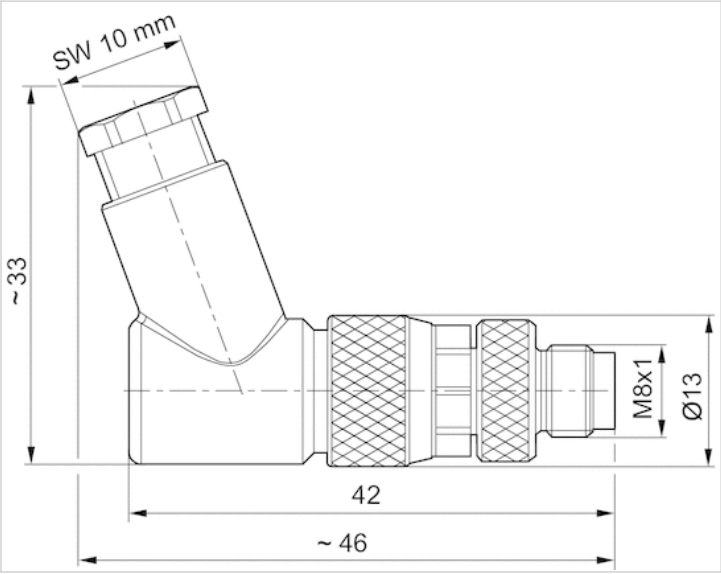

Pin assignments

Plug pin assignment

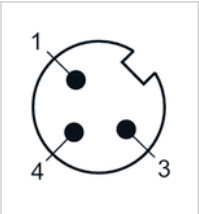

Round plug connector, Series CON-RD

- Plug M8x1 3-pin A-coded angled 90°
- open cable ends
- with cable
- suitable for dynamic laying
- unshielded

Ambient temperature min./max.	-25 ... 80 °C
Operational voltage	48 V AC/DC
Protection class	IP68
Wire cross-section	0.25 mm²
Weight	See table below

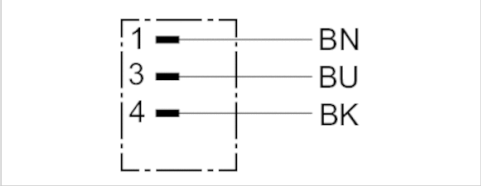

Technical data

Part No.	Max. current	Number of wires	Bending radius min.	Cable-Ø	Cable length	Weight
R412021678	4 A	3	41 mm	4.1 mm	2 m	0.06 kg
R412021679	4 A	3	41 mm	4.1 mm	5 m	0.121 kg
R412021680	4 A	3	41 mm	4.1 mm	10 m	0.224 kg

suitable for dynamic laying

Technical information

The specified protection class is only valid in assembled and tested state.

Technical information

Material	
Housing	Polyurethane
Cable sheath	Polyurethane

Dimensions

Dimensions

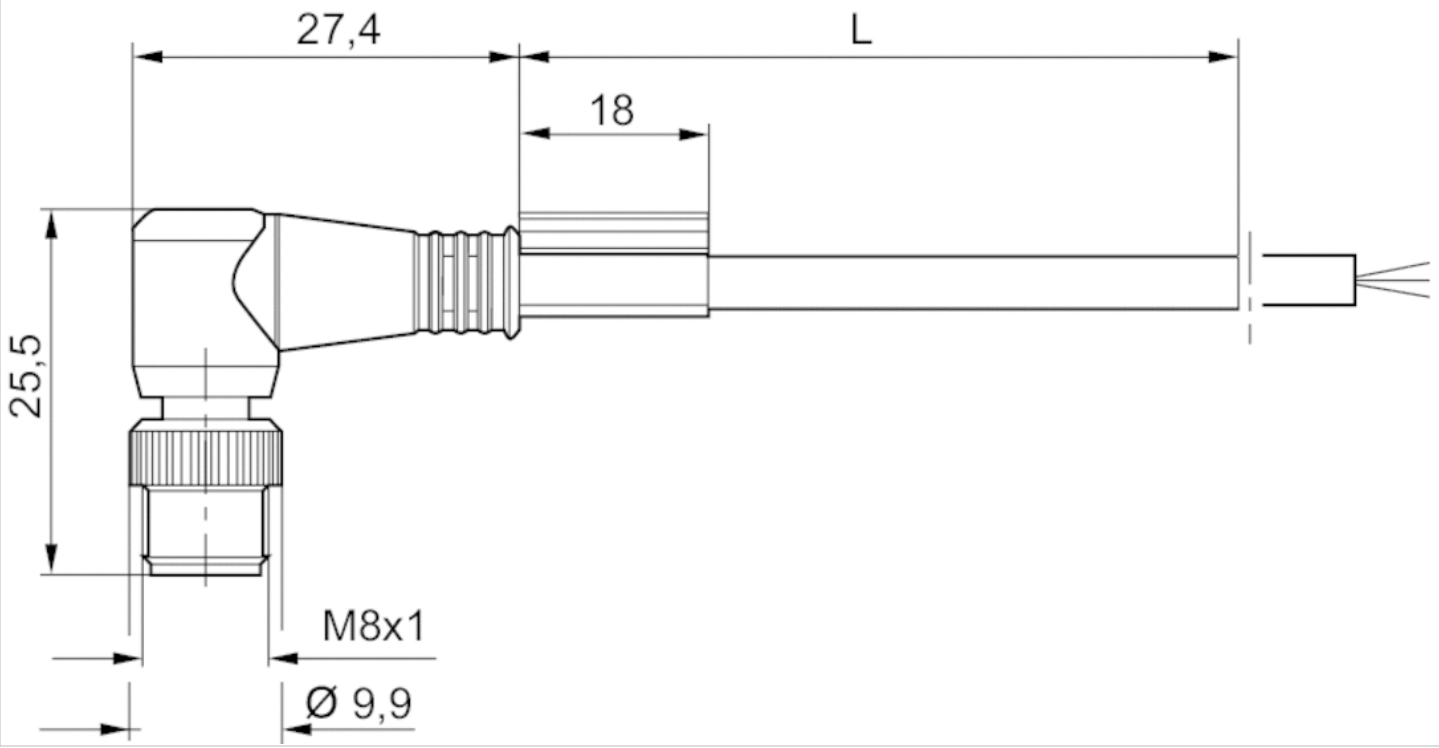

L = length

Pin assignments

Plug pin assignment

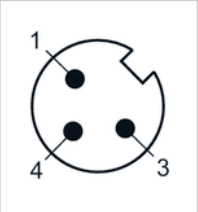

(1) BN=brown
(3) BU=blue
(4) BK=black

Round plug connector, Series CON-RD

- Socket M8x1 3-pin A-coded straight 180°
- Plug M8x1 3-pin A-coded angled 90°
- with cable
- suitable for dynamic laying
- unshielded

Ambient temperature min./max.	-25 ... 80 °C
Operational voltage	48 V AC/DC
Protection class	IP68
Wire cross-section	0.25 mm²
Weight	See table below

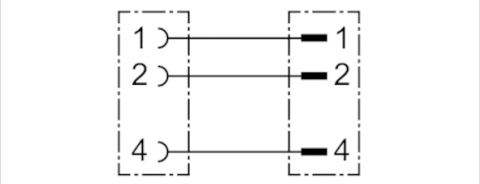

Technical data

Part No.	Max. current	Number of wires	Bending radius min.	Cable-Ø	Cable length	Weight
R412021681	4 A	3	41 mm	4.1 mm	1 m	0.045 kg
R412021682	4 A	3	41 mm	4.1 mm	2 m	0.064 kg
R412021683	4 A	3	41 mm	4.1 mm	5 m	0.131 kg

suitable for dynamic laying

Technical information

The specified protection class is only valid in assembled and tested state.

Technical information

Material	
Housing	Polyurethane
Cable sheath	Polyurethane

Dimensions

Dimensions

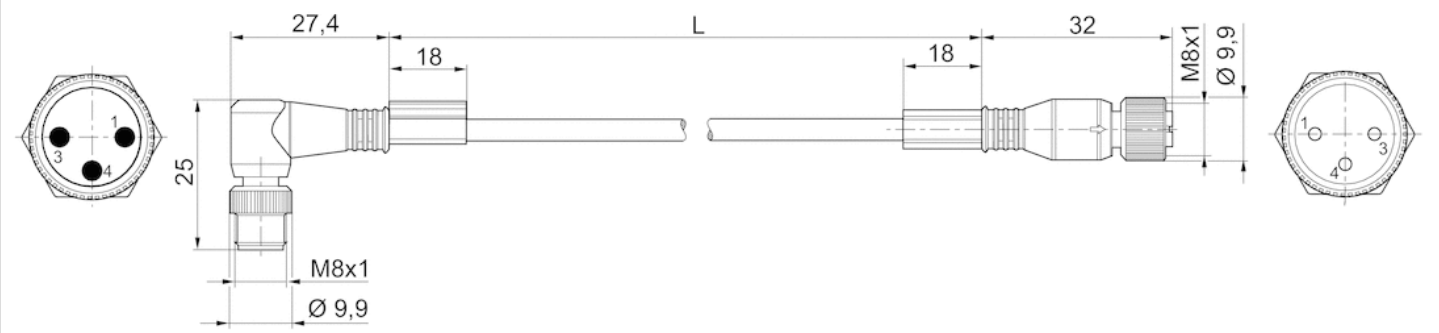

L = length

Pin assignments

Pin assignment, socket

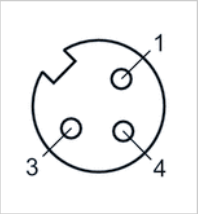

Plug pin assignment

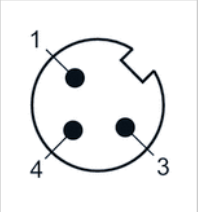

Round plug connector, Series CON-RD

- Plug M8x1 3-pin A-coded straight 180°
- open cable ends
- with cable
- unshielded

Ambient temperature min./max.	-25 ... 80 °C
Operational voltage	30 V AC/DC
Protection class	IP67
Wire cross-section	0.25 mm²
Weight	See table below

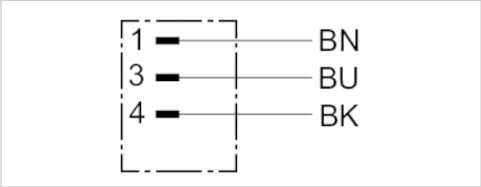

Technical data

Part No.	Max. current	Number of wires	Cable-Ø	Cable length	Weight
8946203602	3 A	3	4.5 mm	3 m	0.06 kg
8946203612	3 A	3	4.5 mm	5 m	0.143 kg
8946203622	3 A	3	4.5 mm	10 m	0.281 kg

Technical information

The specified protection class is only valid in assembled and tested state.

Technical information

Material	
Housing	Polyurethane
Cable sheath	Polyvinyl chloride

Dimensions

Dimensions

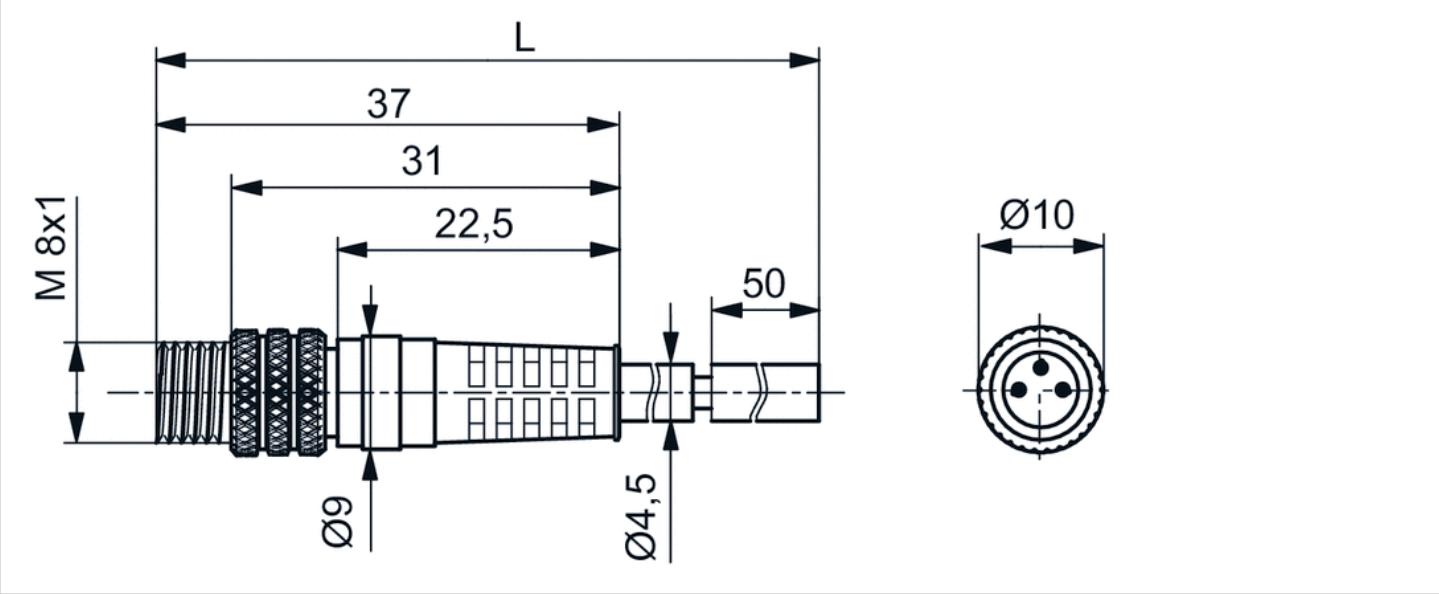

L = length

Pin assignments

Plug pin assignment

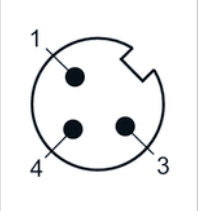

(1) BN=brown
(3) BU=blue
(4) BK=black

Round plug connector, Series CON-RD

- Socket M8x1 3-pin A-coded straight 180°
- Plug A-coded straight 180°
- with cable
- unshielded

Protection class	IP68
Weight	See table below

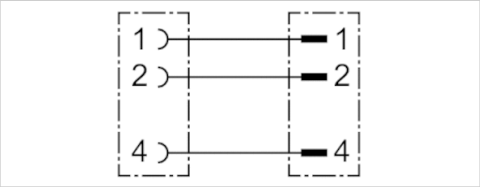

Technical data

Part No.	Number of wires	Cable-Ø	Cable length	Weight
8946203702	3	4.5 mm	1 m	0.038 kg
8946203712	3	4.5 mm	2 m	0.067 kg
8946203722	3	4.5 mm	5 m	0.148 kg

Technical information

The specified protection class is only valid in assembled and tested state.

Technical information

Material	
Cable sheath	Polyvinyl chloride

Dimensions

Dimensions

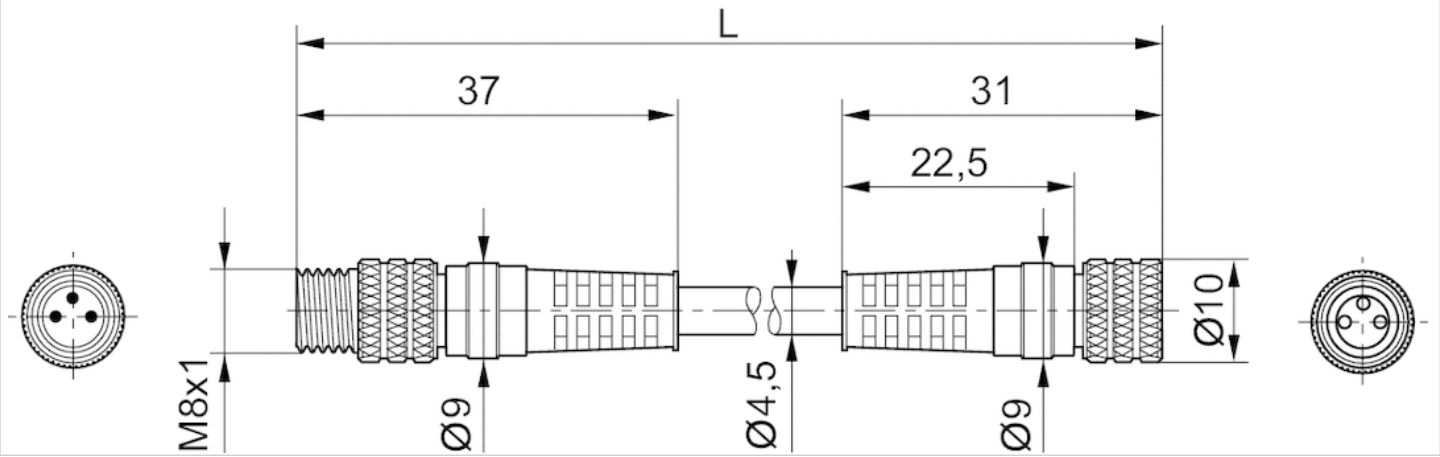

L = length

Pin assignments

Pin assignment, socket

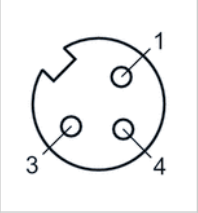

Plug pin assignment

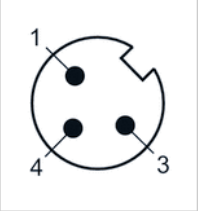

Adapter, Series CON-AP

- Socket, M12x1, 3-pin, A-coded, straight, 180°
- Plug, M8x1, 3-pin, A-coded, straight, 180°
- unshielded

Ambient temperature min./max.	-25 ... 85 °C
Operational voltage	48 V AC/DC
Protection class	IP67
Weight	0.013 kg

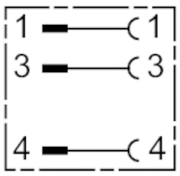

Technical data

Part No.	Max. current	Contact assignment
R412021684	4 A	3

Technical information

The specified protection class is only valid in assembled and tested state.

Technical information

Material	
Housing	Polyurethane

Dimensions

Dimensions

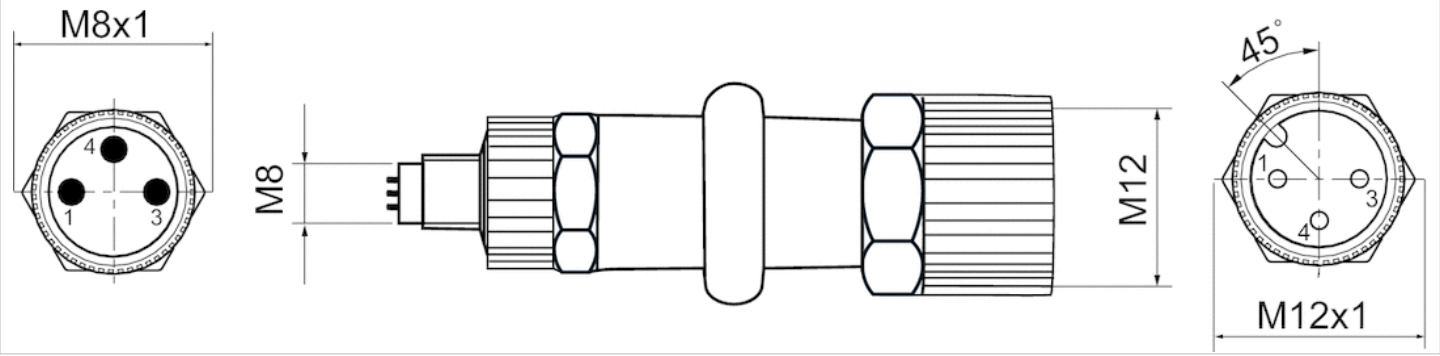

Pin assignments

Plug pin assignment

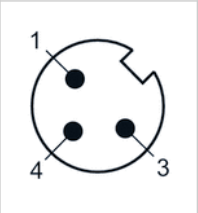

Pin assignment, socket

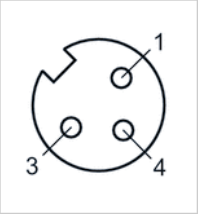

Round plug connector, Series CON-RD

- Plug, M12x1, 4-pin, A-coded, angled, 90° Plug, M12x1, 4-pin, A-coded, straight, 180°
- UL (Underwriters Laboratories)
- unshielded

Connection type	Screws
Ambient temperature min./max.	-40 ... 85 °C
Operational voltage	48 V AC/DC
Protection class	IP67
Weight	See table below

The delivered product may vary from that in the illustration.

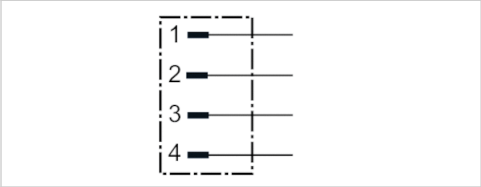

Technical data

Part No.	Electrical connection	Max. current	suitable cable-Ø min./max	Weight
	1			
1834484223	Plug M12x1 4-pin A-coded angled 90°	4 A	4 / 6 mm	0.02 kg
1834484246	Plug M12x1 4-pin A-coded straight 180°	4 A	2.1 / 3 mm	0.024 kg

Part No.	Fig.
1834484223	Fig. 1
1834484246	Fig. 2

For the duo plug, the cable diameter to be used varies between 2.1 ... 3.0 mm and 4.0 ... 5.0 mm depending on the seal used.

Technical information

The specified protection class is only valid in assembled and tested state.
Included: 2 seals for 2 cables each with Ø 2.1 mm ... 3.0 mm and Ø 4.0 mm ... 5.0 mm .

Technical information

Material	
Housing	Polyamide

Dimensions

Fig. 1

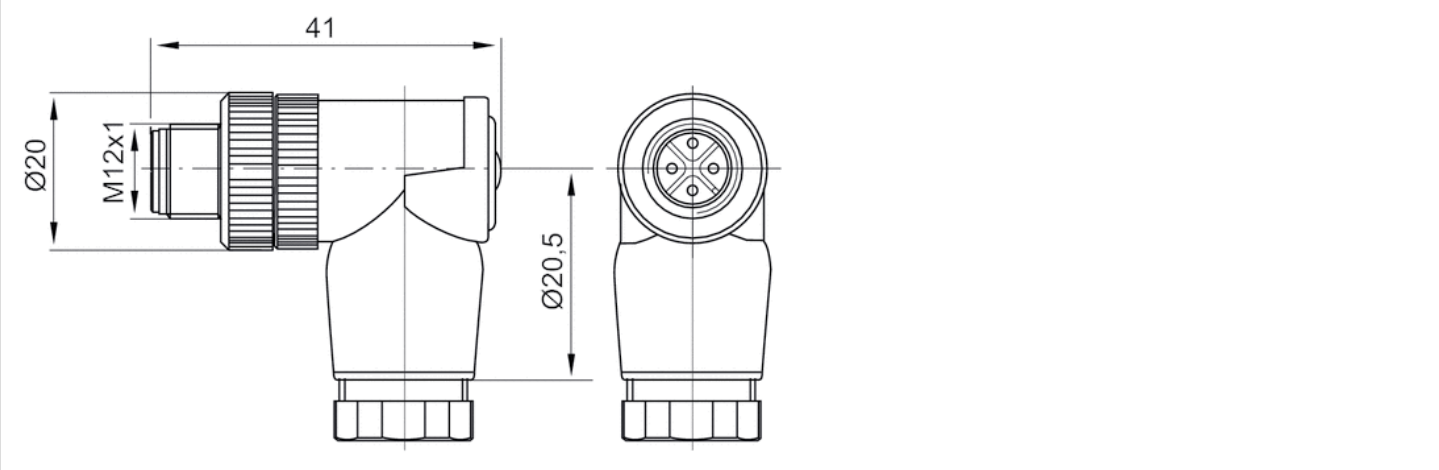

Fig. 2

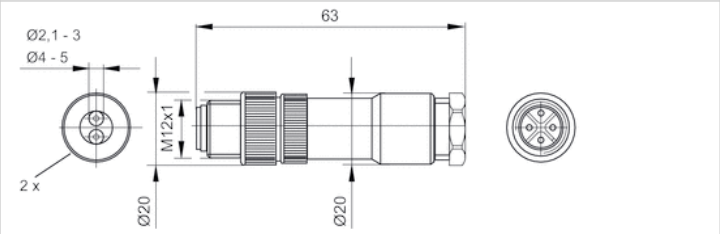

duo plug

Pin assignments

Plug pin assignment

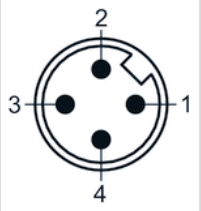

Round plug connector, Series CON-RD

- Plug, M12x1, 4-pin, A-coded, straight, 180°
- UL (Underwriters Laboratories)
- unshielded

Connection type	Screws
Ambient temperature min./max.	-40 ... 85 °C
Operational voltage	48 V AC/DC
Protection class	IP67
Weight	0.016 kg

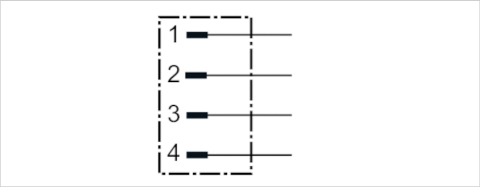

Technical data

Part No.	Max. current	suitable cable-Ø min./max
1834484222	4 A	4 / 6 mm

Technical information

The specified protection class is only valid in assembled and tested state.

Technical information

Material	
Housing	Polyamide

Dimensions

Dimensions

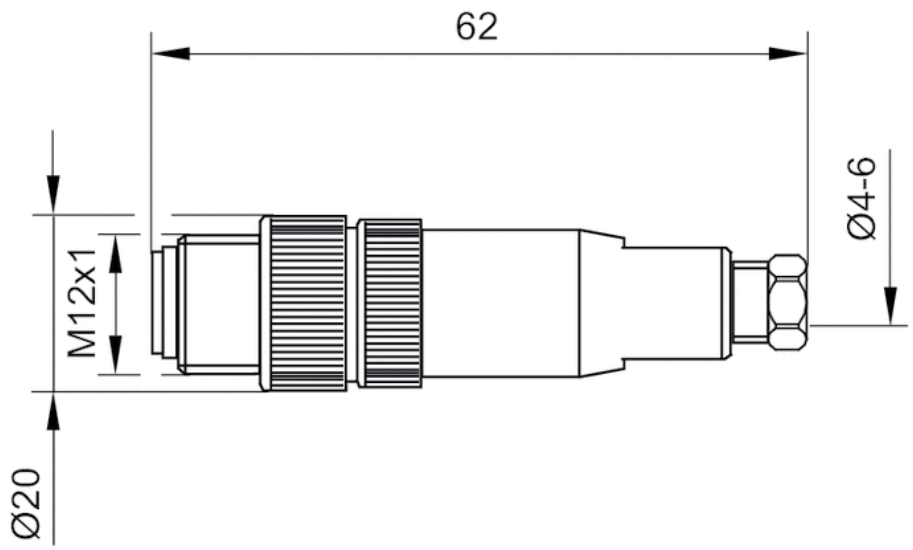

Pin assignments

Plug pin assignment

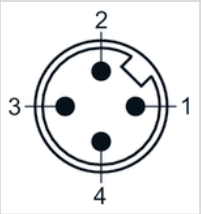

Round plug connector, Series CON-RD

- Socket M8x1 3-pin A-coded straight 180°
- Plug M12x1 3-pin A-coded straight 180°
- with cable
- unshielded

Protection class	IP68
Weight	0.073 kg

The delivered product may vary from that in the illustration.

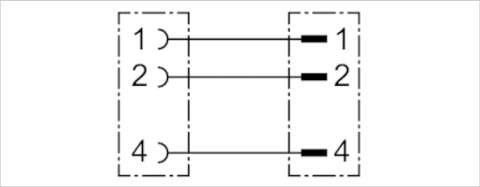

Technical data

Part No.	Number of wires	Cable length
8946203462	3	2 m

Technical information

The specified protection class is only valid in assembled and tested state.

Technical information

Material	
Cable sheath	Polyvinyl chloride

Dimensions

Dimensions

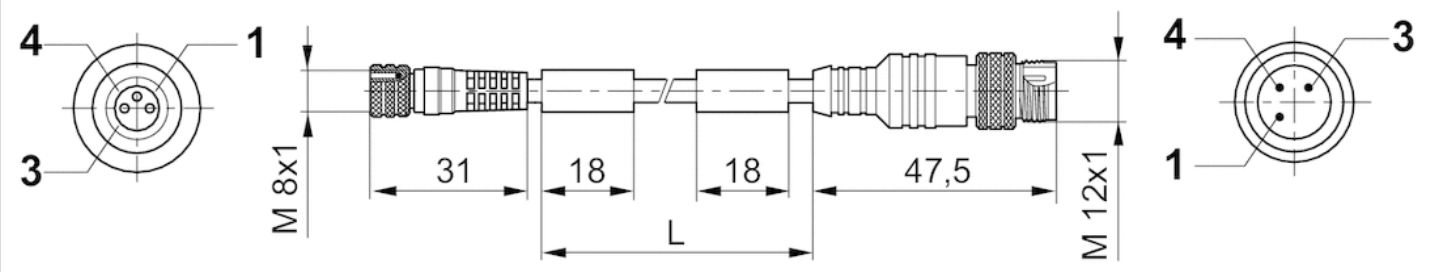

L = length

Pin assignments

Plug pin assignment

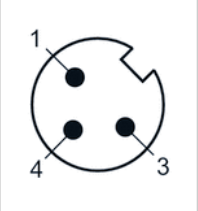

Pin assignment, socket

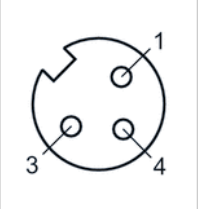

Round plug connector, Series CON-RD

- Socket M8x1 3-pin A-coded straight 180°
- Plug M12x1 3-pin A-coded angled 90°
- with cable
- suitable for dynamic laying
- unshielded

Ambient temperature min./max.	See table below
Operational voltage	48 V AC/DC
Protection class	IP67
Wire cross-section	0.25 mm²
Mounting screw tightening torque	0.5 Nm
Weight	See table below

The delivered product may vary from that in the illustration.

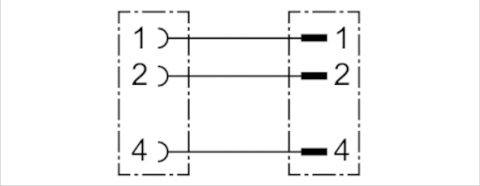

Technical data

Part No.	Ambient temperature min./max.	Max. current	Number of wires	Bending radius min.	Cable-Ø	Cable length
R412021696	-25 ... 80 °C	4 A	3	41 mm	4.1 mm	2 m
R412021697	-20 ... 80 °C	4 A	3	41 mm	4.1 mm	5 m

Part No.	Weight
R412021696	0.077 kg
R412021697	0.135 kg

suitable for dynamic laying

Technical information

The specified protection class is only valid in assembled and tested state.

Technical information

Material	
Housing	Polyurethane
Cable sheath	Polyurethane

Dimensions

Dimensions

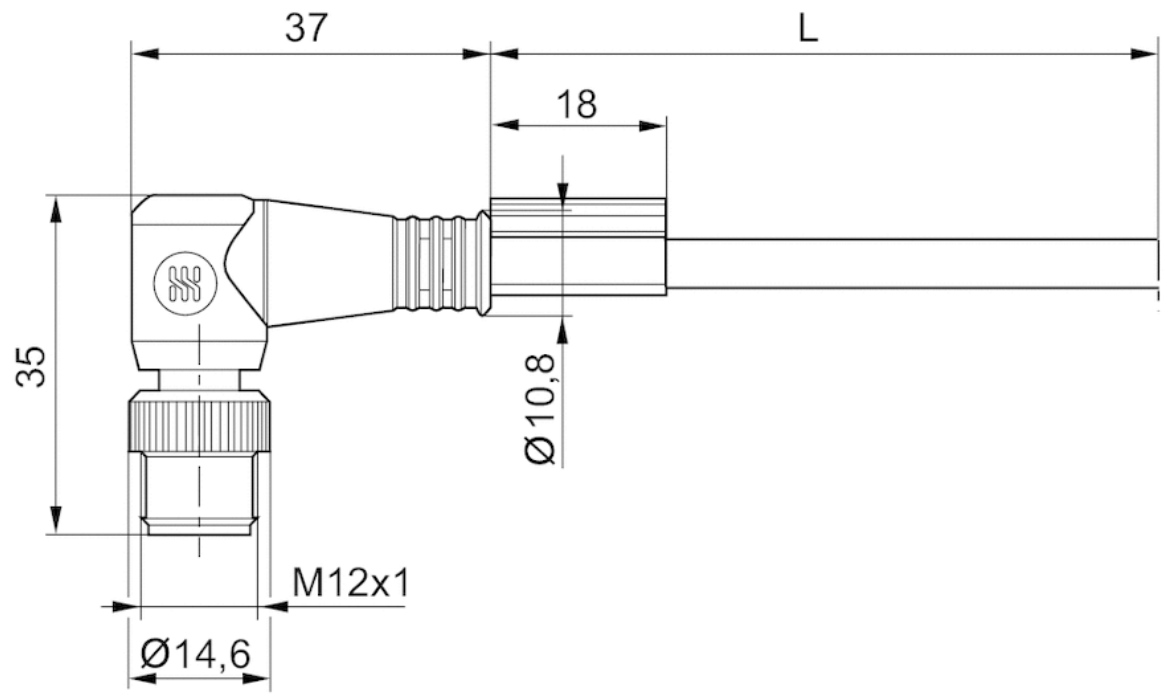

L = length

Pin assignments

Pin assignment, socket

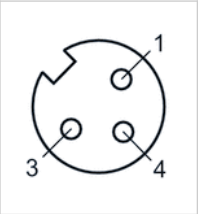

Plug pin assignment

Y-Plug connector, series CON-RD

- Plug M12x1 4-pin A-coded straight 180°
- 2 x open cable ends 3-pin
- 3-pin
- with cable
- unshielded

Ambient temperature min./max.	-40 ... 80 °C
Operational voltage	48 V AC/DC
Protection class	IP67
Wire cross-section	0.34 mm²
Mounting screw tightening torque	0.8 Nm
Weight	0.122 kg

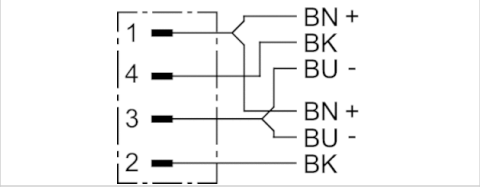

Technical data

Part No.	Max. current	Number of wires	Cable-Ø	Cable length
R412021688	4 A	4	4.3 mm	2 m

with self-clinching screw

Technical information

The specified protection class is only valid in assembled and tested state.

Technical information

Material	
Housing	Polyurethane
Cable sheath	Polyurethane

Dimensions

Dimensions

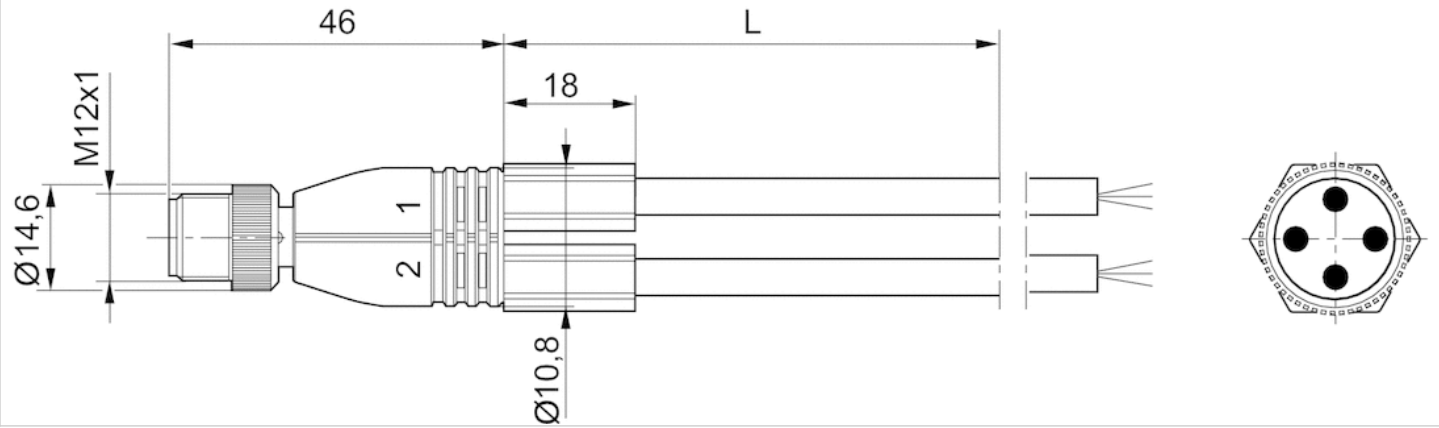

L = length

Pin assignments

Plug pin assignment

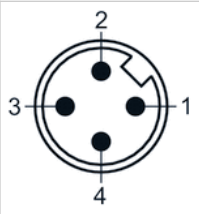

Line 1: (1) BN = brown, (3) BU =blue, (4) BK = black
Line 2: (1) BN = brown, (3) BU =blue, (2) BK = black

Round plug connector, Series CON-RD

- Socket M12x1 5-pin A-coded straight 180°
- Plug M12x1 5-pin A-coded angled 90°
- with cable
- suitable for dynamic laying
- unshielded

Ambient temperature min./max.	-25 ... 85 °C
Operational voltage	48 V AC/DC
Protection class	IP68
Wire cross-section	0.34 mm²
Mounting screw tightening torque	0.8 Nm
Weight	See table below

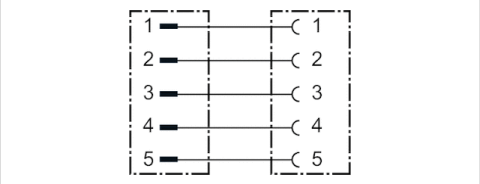

Technical data

Part No.	Max. current	Number of wires	Bending radius min.	Cable-Ø	Cable length	Weight
R412021694	4 A	5	50 mm	5 mm	2 m	0.114 kg
R412021695	4 A	5	50 mm	5 mm	5 m	0.217 kg

suitable for dynamic laying

Technical information

The specified protection class is only valid in assembled and tested state.

Technical information

Material	
Housing	Polyurethane
Cable sheath	Polyurethane

Dimensions

Dimensions

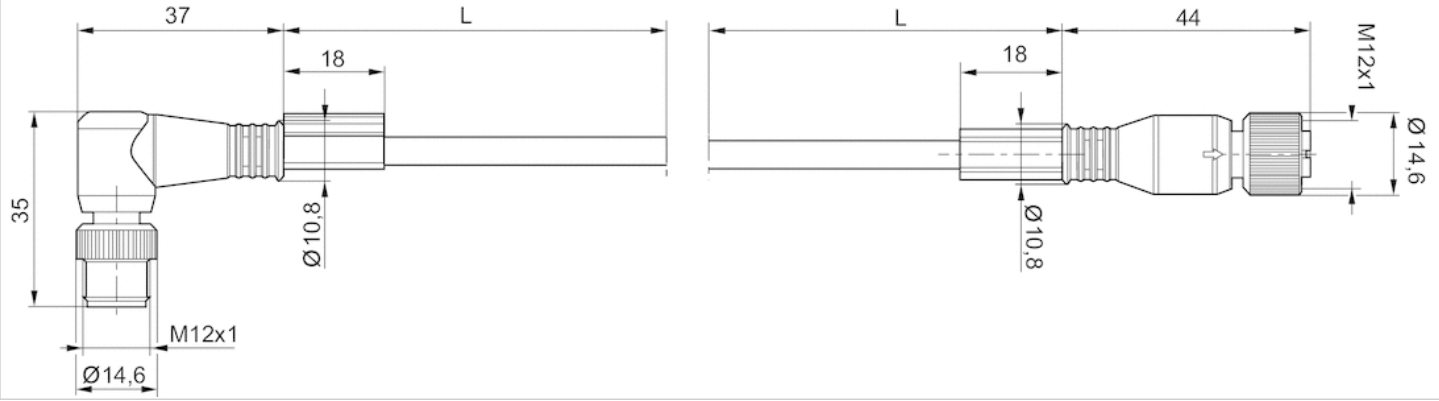

L = length

Pin assignments

Pin assignment, socket

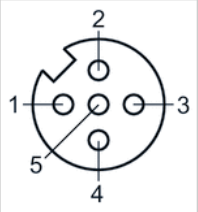

Plug pin assignment

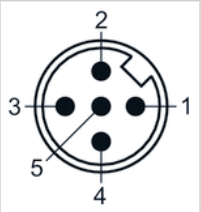

Round plug connector, Series CON-RD

- Plug M12x1 5-pin A-coded straight 180°
- open cable ends 5-pin
- with cable
- unshielded

Protection class	IP68
Weight	See table below
	The delivered product may vary from that in the illustration.

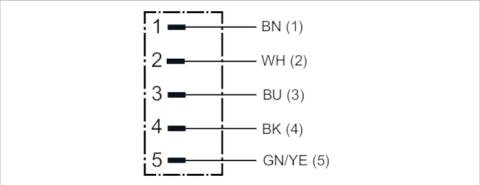

Technical data

Part No.	Number of wires	Cable length	Weight
8946203432	5	2 m	0.102 kg
8946203442	5	5 m	0.238 kg

with self-clinching screw

Technical information

The specified protection class is only valid in assembled and tested state.

Technical information

Material	
Cable sheath	Polyvinyl chloride

Dimensions

Dimensions

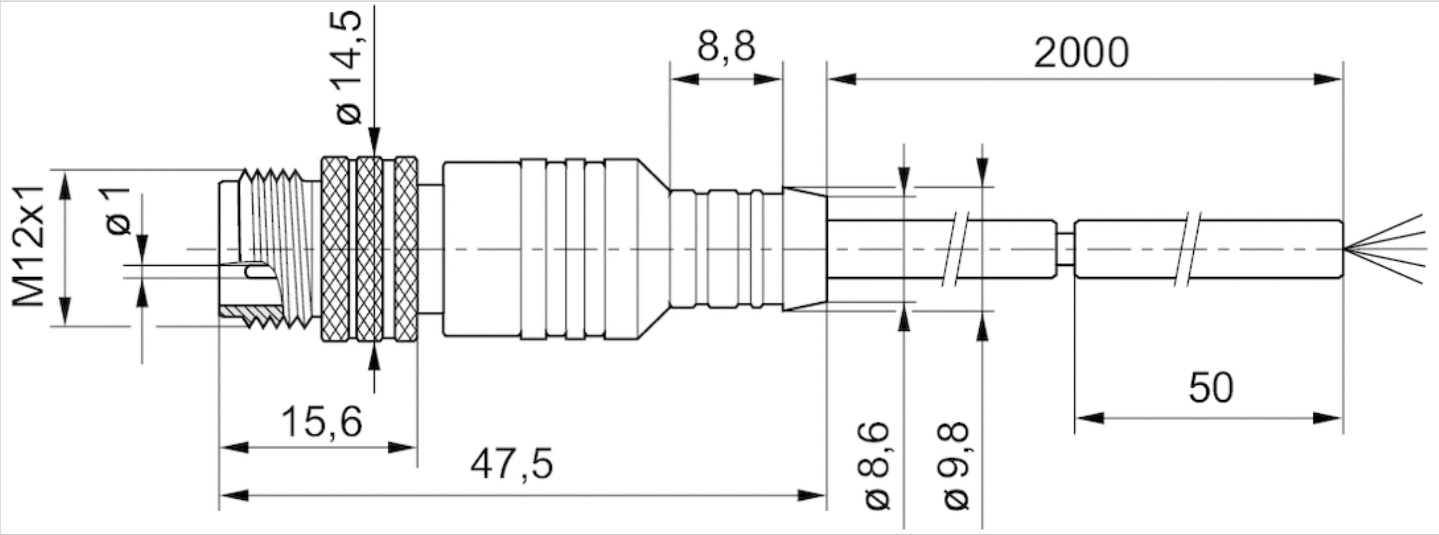

L = length

Pin assignments

Plug pin assignment

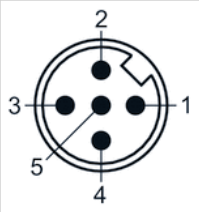

(1) BN=brown
(2) WH=white
(3) BU=blue
(4) BK=black
(5) GRN-Y=green-yellow

Round plug connector, Series CON-RD

- Plug M12x1 5-pin A-coded angled 90°
- open cable ends 5-pin
- with cable
- suitable for dynamic laying
- unshielded

Ambient temperature min./max.	See table below
Operational voltage	48 V AC/DC
Protection class	IP68
Wire cross-section	0.34 mm²
Mounting screw tightening torque	0.8 Nm
Weight	See table below

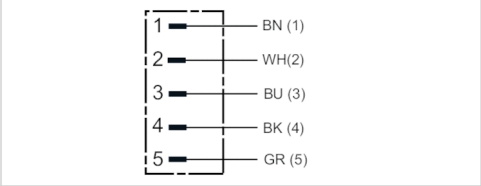

Technical data

Part No.	Ambient temperature min./max.	Max. current	Number of wires	Bending radius min.	Cable-Ø	Cable length
R412021691	-40 ... 85 °C	4 A	5	50 mm	5 mm	2 m
R412021692	-40 ... 85 °C	4 A	5	50 mm	5 mm	5 m
R412021693	-25 ... 85 °C	4 A	5	50 mm	5 mm	10 m

Part No.	Weight
R412021691	0.093 kg
R412021692	0.2 kg
R412021693	0.381 kg

suitable for dynamic laying

Technical information

The specified protection class is only valid in assembled and tested state.

Technical information

Material	
Housing	Polyurethane
Cable sheath	Polyurethane

Dimensions

Dimensions

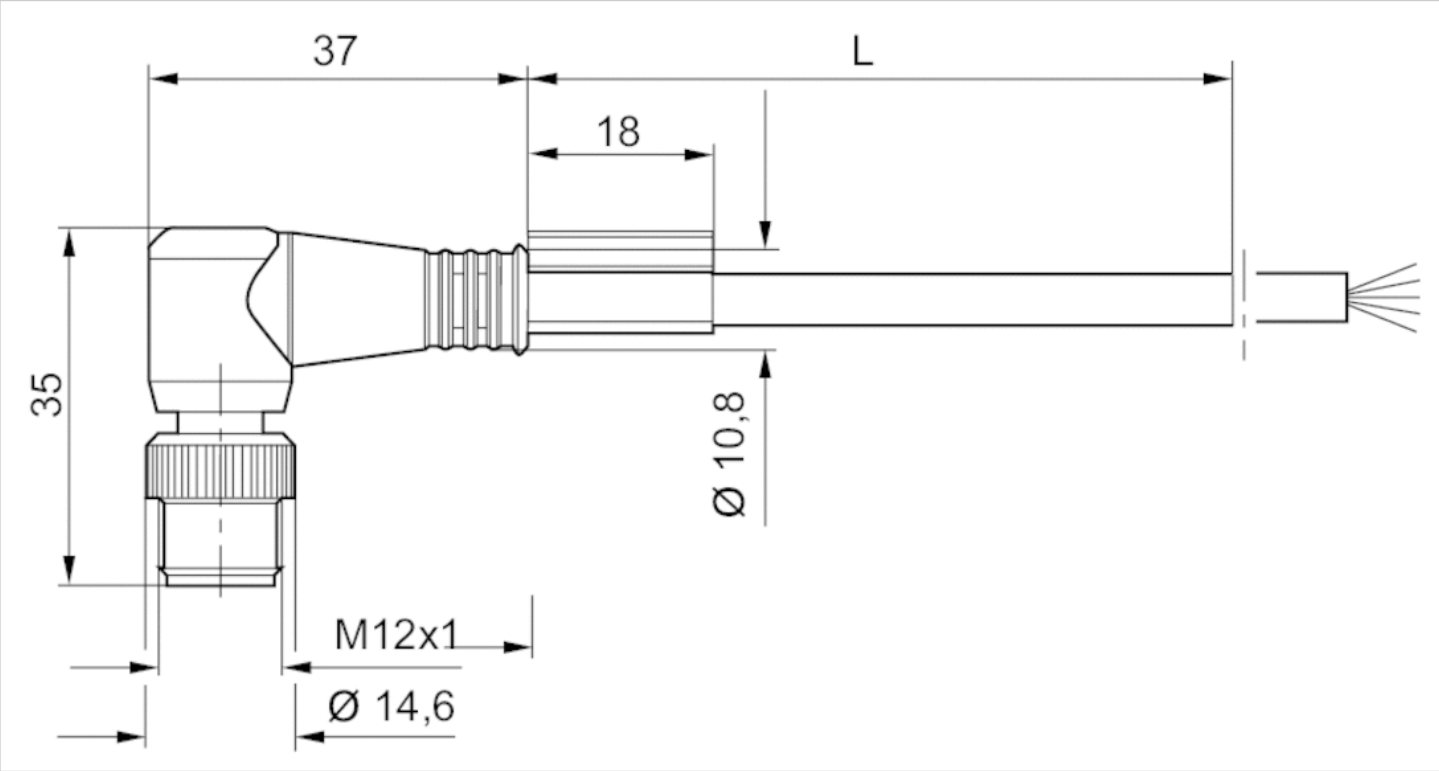

L = length

Pin assignments

Plug pin assignment

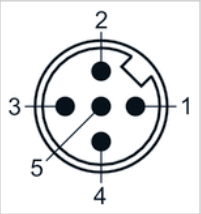

(1) BN=brown
(2) WH=white
3) BU=blue
(4) BK=black
(5) GY=grey

Round plug connector, Series CON-RD

- Socket M12x1 5-pin A-coded straight 180°
- Plug M12x1 5-pin A-coded angled 90°
- with cable
- suitable for dynamic laying
- unshielded

Ambient temperature min./max.	-25 ... 85 °C
Operational voltage	48 V AC/DC
Protection class	IP68
Wire cross-section	0.34 mm²
Mounting screw tightening torque	0.8 Nm
Weight	See table below

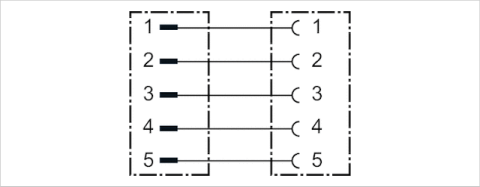

Technical data

Part No.	Max. current	Number of wires	Bending radius min.	Cable-Ø	Cable length	Weight
R412021694	4 A	5	50 mm	5 mm	2 m	0.114 kg
R412021695	4 A	5	50 mm	5 mm	5 m	0.217 kg

suitable for dynamic laying

Technical information

The specified protection class is only valid in assembled and tested state.

Technical information

Material	
Housing	Polyurethane
Cable sheath	Polyurethane

Dimensions

Dimensions

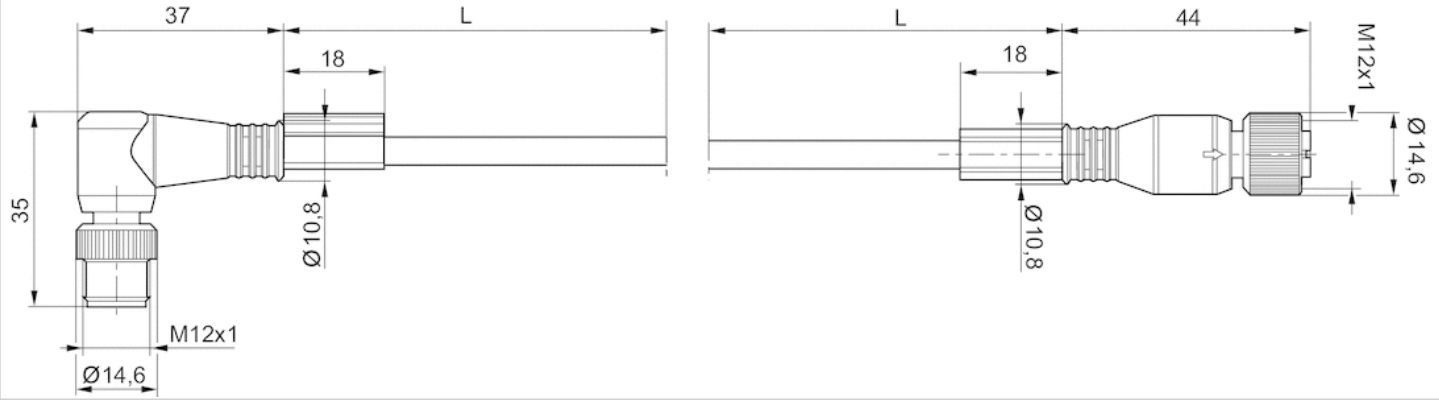

L = length

Pin assignments

Pin assignment, socket

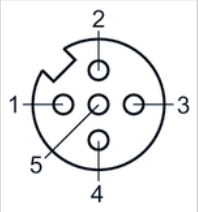

Plug pin assignment

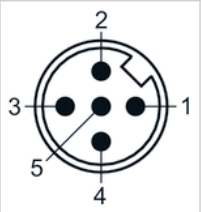

Round plug connector, Series CON-RD

- Socket M12x1 5-pin A-coded straight 180°
- Plug M12x1 5-pin A-coded angled 90°
- with cable
- suitable for dynamic laying
- shielded

Ambient temperature min./max.	-20 ... 85 °C
Operational voltage	48 V AC/DC
Protection class	IP68
Wire cross-section	0.34 mm²
Mounting screw tightening torque	0.8 Nm

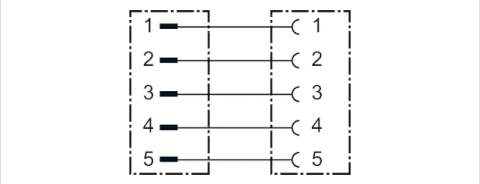

Technical data

Part No.	Max. current	Number of wires	Bending radius min.	Cable-Ø	Cable length
R412022193	4 A	4	54 mm	5.4 mm	2 m

suitable for dynamic laying

Technical information

The specified protection class is only valid in assembled and tested state.

Technical information

Material	
Housing	Polyurethane
Cable sheath	Polyurethane

Dimensions

Dimensions

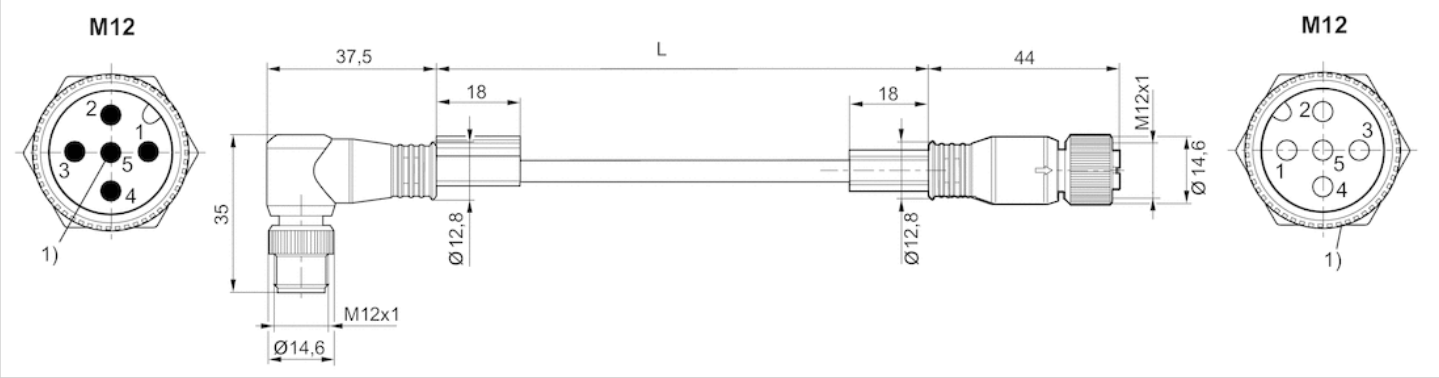

L = length
PIN assignment 1:1
1) Shield is connected to pin 5 of the plug and the knurled screw of the socket.

Pin assignments

Pin assignment, socket

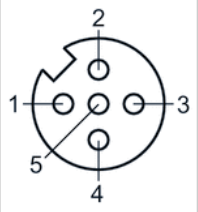

Plug pin assignment

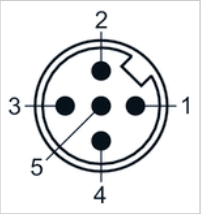

Round plug connector, Series CON-RD

- Socket M12x1 8-pin A-coded straight 180°
- Plug M12x1 8-pin A-coded straight 180°
- with cable
- suitable for dynamic laying
- shielded

Ambient temperature min./max.	-25 ... 80 °C
Operational voltage	30 / 36 V AC/DC
Protection class	IP67
Wire cross-section	0.25 mm²
Weight	See table below

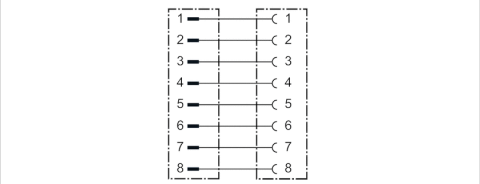

Technical data

Part No.	Max. current	Number of wires	Cable-Ø	Cable length	Weight
8946202802	1.5 A	8	6.6 mm	0.5 m	0.067 kg
8946202812	1.5 A	8	6.6 mm	1 m	0.96 kg
8946202822	1.5 A	8	6.6 mm	2 m	0.161 kg
8946202832	1.5 A	8	6.6 mm	5 m	0.339 kg
8946202842	1.5 A	8	6.6 mm	10 m	0.65 kg

suitable for dynamic laying

Technical information

The specified protection class is only valid in assembled and tested state.

Technical information

Material	
Housing	Polyurethane
Seals	Fluorocaoutchouc
Cable sheath	Polyurethane

Dimensions

Dimensions

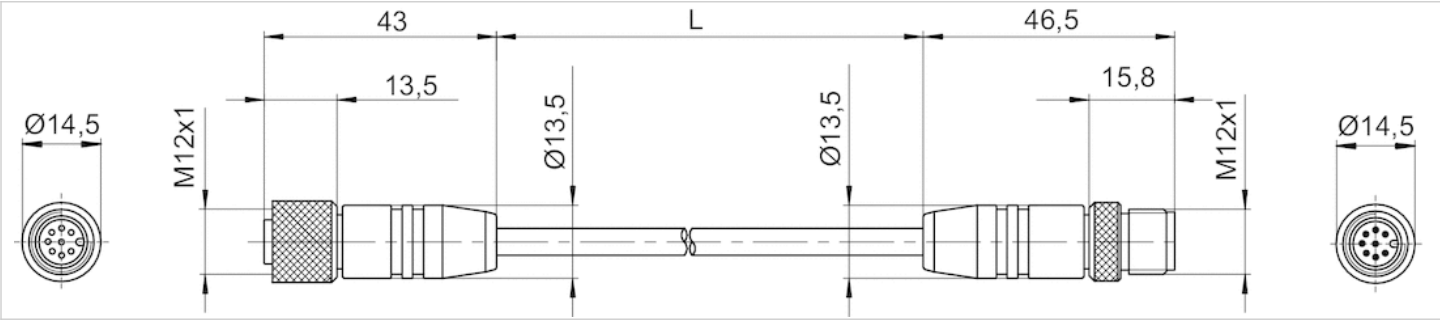

L = length

Pin assignments

Plug pin assignment

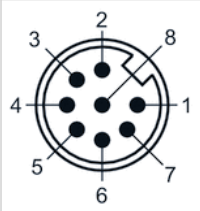

Pin assignment, socket

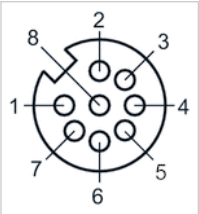

Distributor, Series AES

- 4x passive distributor, M12x1, 8-pin / 4x M8x1, 3-pin
- Plug (male), M12x1, 8-pin

Ambient temperature min./max.	-25 ... 80 °C
Operational voltage electronics	15-30 V DC
Power consumption electronics	2 A
Protection class	IP67
Weight	0.07 kg

Technical data

Part No.	Type	Port	Port
		1	2
R412028732	CON-AP-MS-M12-8-FS-4XM8-3	Plug (male), M12x1, 8-pin	Socket (female), M8x1, 3-pin

Technical information

Material	
Housing	Polybutyleneterephthalate

Dimensions

Dimensions

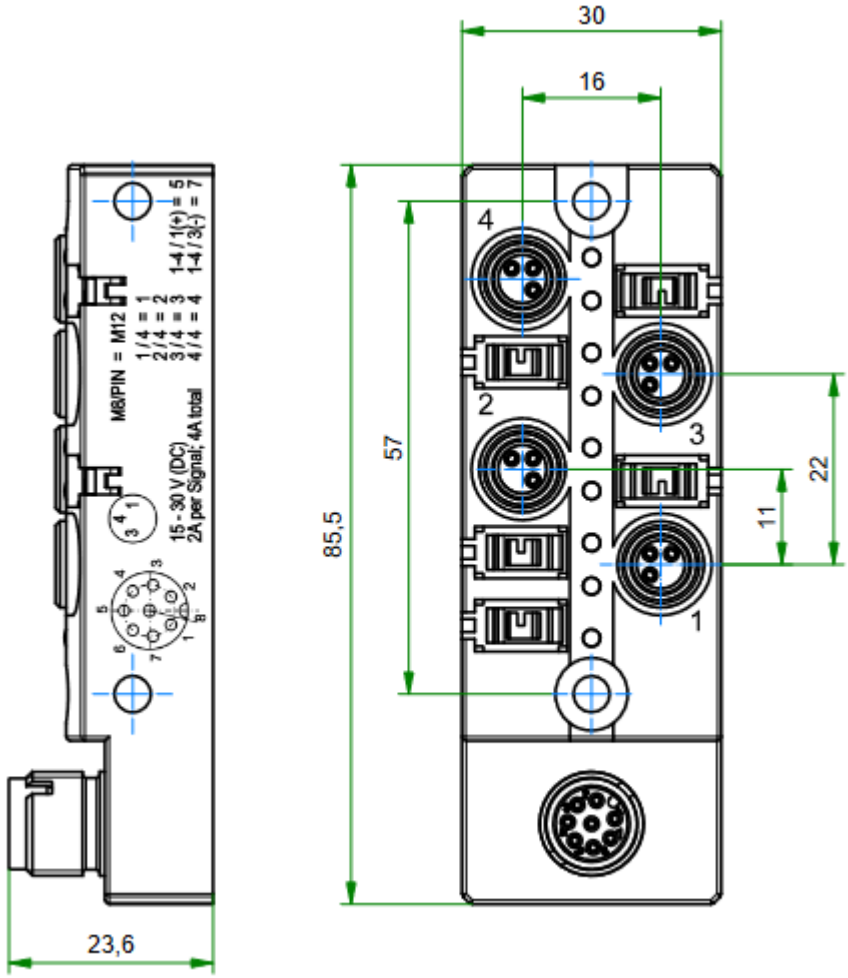

Passive distributor, Series AES

R412028732

General series information
AVENTICS Series AES Field bus modules

- The AVENTICS Series AES fieldbus connection can be integrated into all AVENTICS fieldbus-compatible valve systems or can also be configured as a stand-alone solution. AES connects your AVENTICS valve system to all relevant fieldbus protocols and offers the integration of I/O-modules and enables optimized decentralized wiring of sensors. The integration of the Digital Twin enables users to be IIoT ready and use the AES to solve their interoperability challenges.

Technical data

Version	Passive distributor
E/A capable	connection with I/O
Number of I/O connections	4 inputs / 4 outputs
Signal connection E/A type	Socket
Signal connection E/A thread size	M8x1
Signal connection E/A number of poles	3-pin
Min. ambient temperature	-25 °C
Max. ambient temperature	80 °C
Operational voltage electronics	15-30 V DC
Current consumption electronics	2 A
Protection class	IP67
Communication port Type	Plug
Number	1
Communication port, Thread size	M12x1
Communication port, Number of poles	8-pin
Communication port, Coding	A-coded

Material

Housing material	Polybutyleneterephthalate
Part No.	R412028732

Dimensions

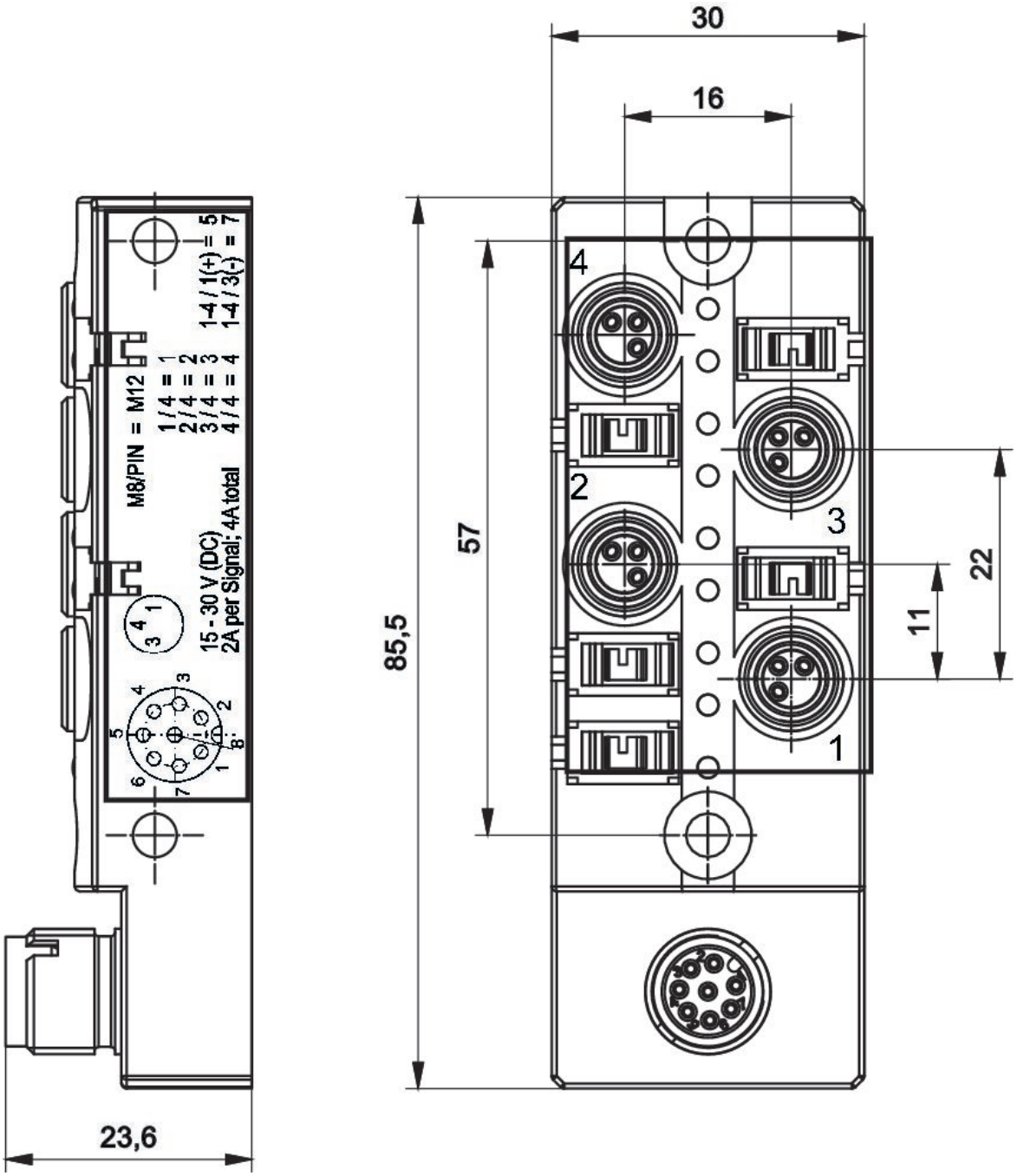

Circuit diagram

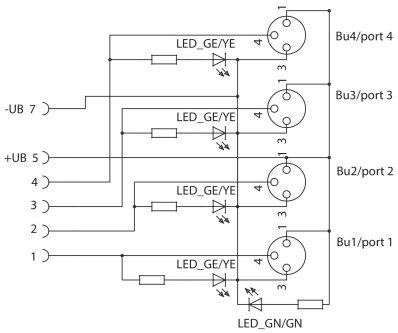

Y-Plug connector, series CON-AP

- Plug, M12x1, 5-pin, A-coded, straight, 180°
- Socket, M12x1, 5-pin, A-coded, straight, 180°
- unshielded

Ambient temperature min./max.	-25 ... 90 °C
Operational voltage	48 V AC/DC
Protection class	IP67
Weight	0.029 kg

The delivered product may vary from that in the illustration.

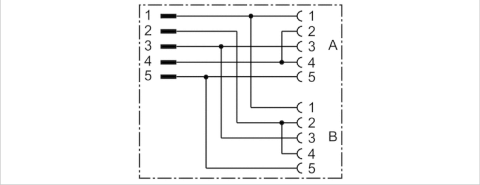

Technical data

Part No.	Max. current
8941002392	4 A

Technical information

The specified protection class is only valid in assembled and tested state.

Technical information

Material	
Housing	Polyurethane
Seals	Fluorocaoutchouc

Dimensions

Dimensions

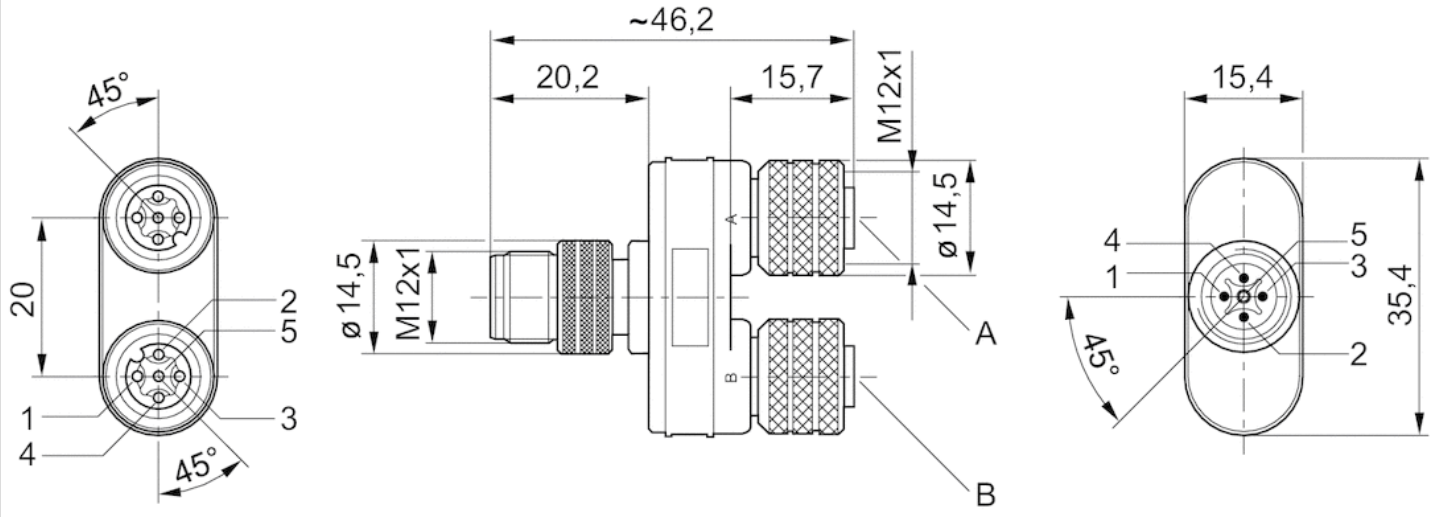

Sockets: Pin 2 and 4 bridged.

Pin assignments

Plug pin assignment

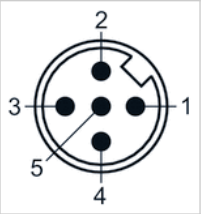

Pin assignment, socket

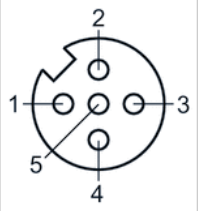

Y-Plug connector, series CON-AP

- Plug, M12x1, 4-pin, A-coded, straight, 180°
- Socket, M8x1, 3-pin, A-coded, straight, 180°
- unshielded

Ambient temperature min./max.	-25 ... 90 °C
Operational voltage	48 V AC/DC
Protection class	IP67
Weight	0.02 kg

The delivered product may vary from that in the illustration.

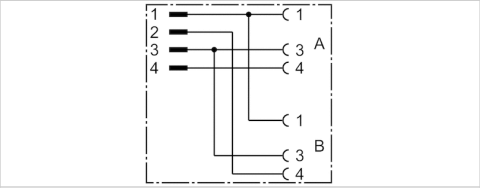

Technical data

Part No.	Max. current
8941002382	4 A

Technical information

The specified protection class is only valid in assembled and tested state.

Technical information

Material	
Housing	Polyurethane
Seals	Fluorocaoutchouc

Dimensions

Dimensions

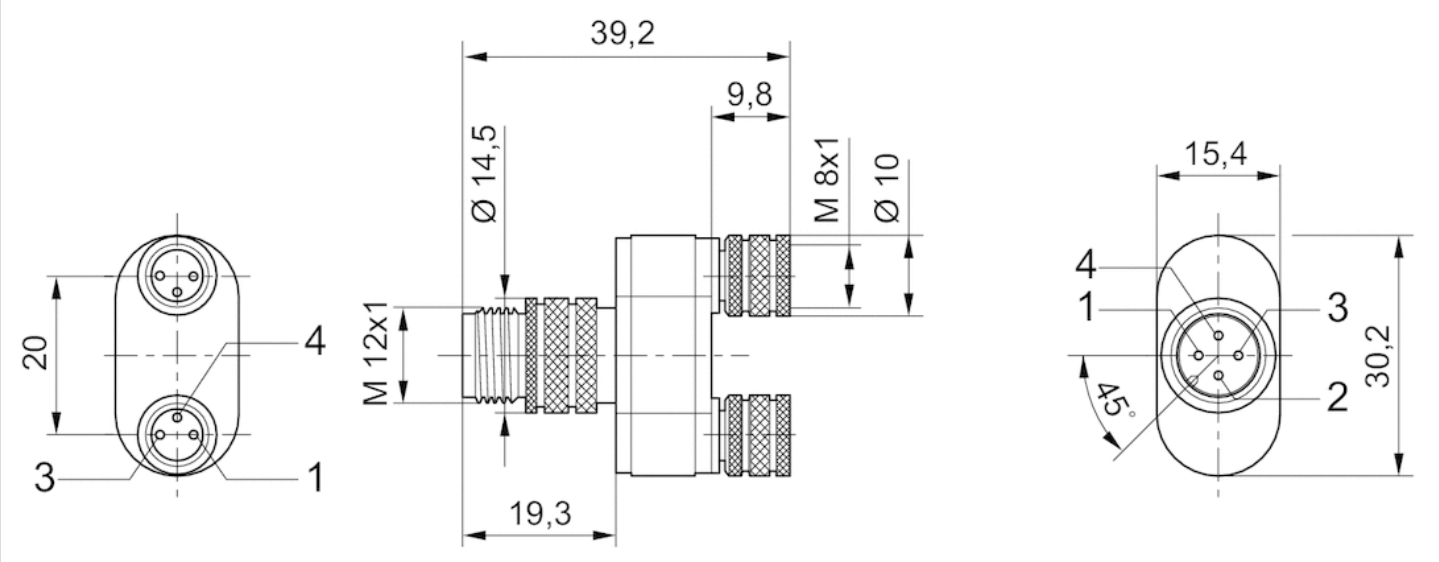

Pin assignments

Plug pin assignment

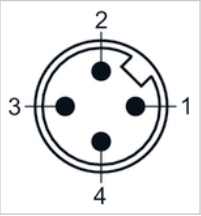

Pin assignment, socket

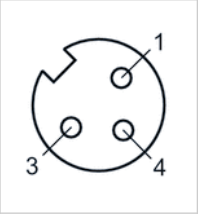

Y-Plug connector, series CON-AP

R412028657

Adapter

Technical data

Type	Adapters & contact bridges
Shielding	unshielded
Min. ambient temperature	-25 °C
Max. ambient temperature	90 °C
Max. current	4 A
Protection class	IP67
Operational voltage	30 V AC / 36 V DC
Electrical connection 1, type	Socket
Electrical connection 1, thread size	M12x1
Electrical connection 1, number of poles	5-pin
Electrical connection 1, coding	A-coded
Cable exit	straight
Cable exit angle	180°
Electrical connection 2, type	Plug
Electrical connection 2, thread size	M12x1
Electrical connection 2, number of poles	4-pin
Electrical connection 2, coding	A-coded
Cable exit	straight
Cable exit angle	180°

Electrical connection 3, type	Plug
Electrical connection 3, thread size	M12x1
Electrical connection 3, number of poles	5-pin
Electrical connection 3, coding	A-coded
Cable exit	straight
Cable exit angle	180°

Material

Housing material	Polyurethane
Seal material	Fluorocaoutchouc
Part No.	R412028657

Technical information

The specified protection class is only valid in assembled and tested state.
For IO-Link Class B supply (external)

Dimensions in mm

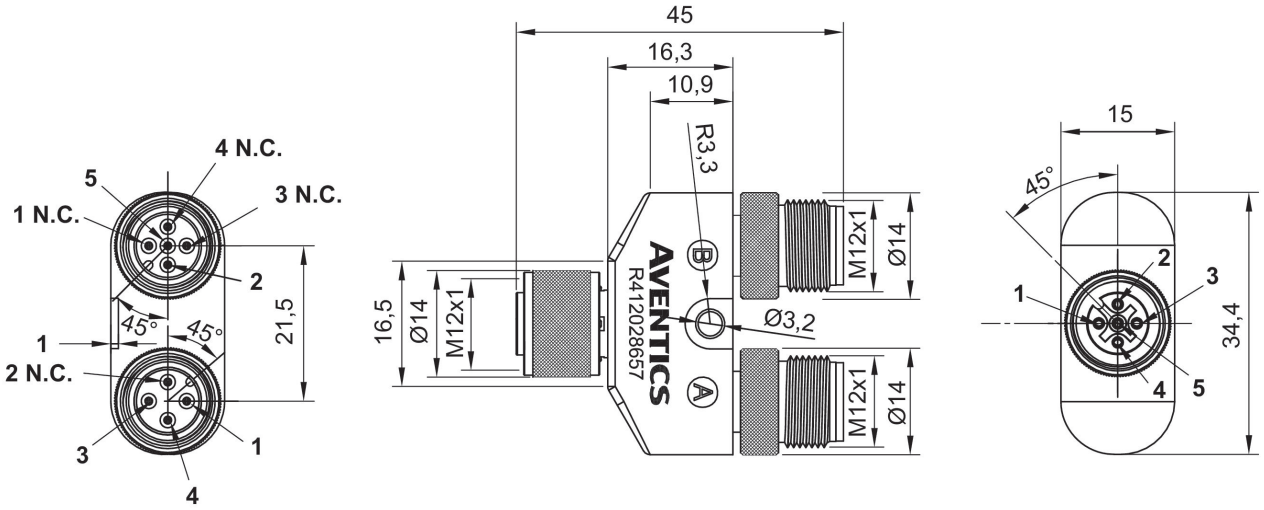

A = Electrical connection 2
B = Electrical connection 3

Pin assignments

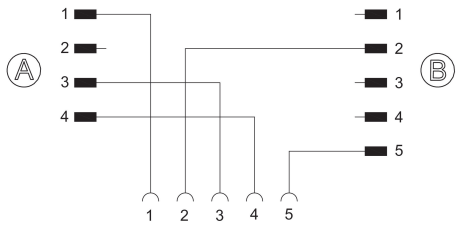

Pin assignments

Pin	Electrical connection 1	Electrical connection 2 (A)	Electrical connection 3 (B)
1	L+	L+	N.C.
2	UA +24V	N.C.	UA +24V
3	L-	L-	N.C.
4	CQ (IO-Link data)	CQ (IO-Link data)	N.C.
5	UA 0V	N.C.	UA 0V

Multipole plug, series CON-MP

- Plug D-Sub 25-pin angled 90°
- Socket D-Sub 25-pin straight 180°
- with cable
- UL (Underwriters Laboratories)
- unshielded

Ambient temperature min./max.	-20 ... 80 °C
Operational voltage	24 V DC
Protection class	IP67
Wire cross-section	0.2 mm²
Weight	See table below

Technical data

Part No.	Max. current	Number of wires	Cable-Ø	Cable length	Certification	Weight
R412020635	3 A	25	8.5 mm	0.5 m	UL (Underwriters Laboratories)	0.205 kg
R412020636	3 A	25	8.5 mm	1 m	UL (Underwriters Laboratories)	0.275 kg
R412020637	3 A	25	8.5 mm	2 m	UL (Underwriters Laboratories)	0.396 kg
R412020638	3 A	25	8.5 mm	5 m	UL (Underwriters Laboratories)	0.756 kg
R412020639	3 A	25	8.5 mm	10 m	UL (Underwriters Laboratories)	1.409 kg

Technical information

The specified protection class is only valid in assembled and tested state.

Technical information

Material	
Housing	Thermoplastic elastomer
Cable sheath	Polyvinyl chloride

Dimensions

Dimensions

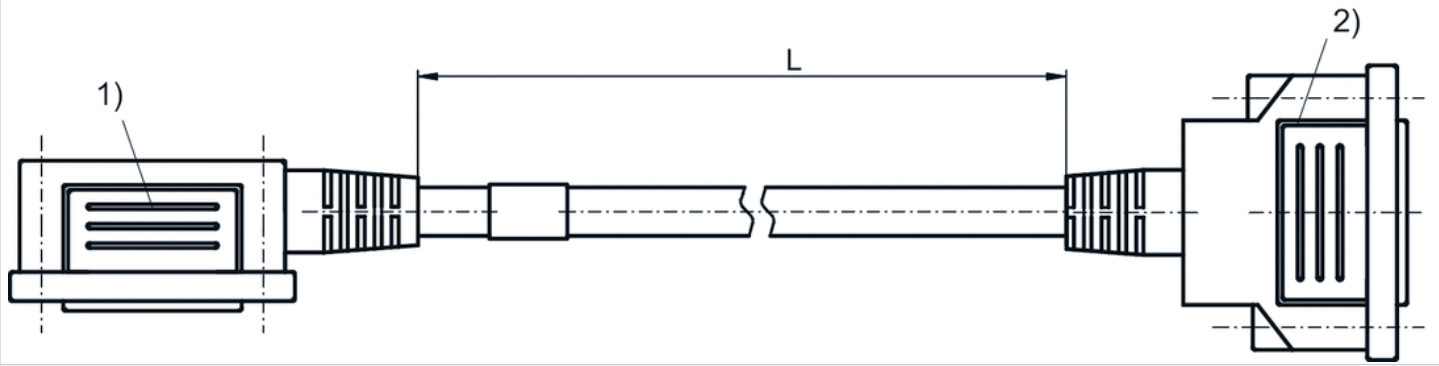

1) Port 1 (Plug)
2) Port 2 (Socket)

Pin assignments

PIN assignment and cable colors, cable identification as per DIN 47100

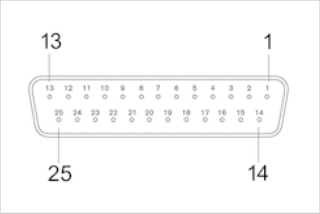

Socket

Pin	1	2	3	4	5	6	7	8	9
Color	white	brown	green	yellow	gray	pink	blue	red	black

10	11	12	13	14	15
violet	gray/pink	red/blue	white/green	brown/green	white/yellow

16	17	18	19	20	21
yellow/brown	white/gray	gray/brown	white/pink	pink/brown	white/blue

22	23	24	25
brown/blue	white/red	brown/red	white/black

Pin assignments

PIN assignment and cable colors, cable identification as per DIN 47100

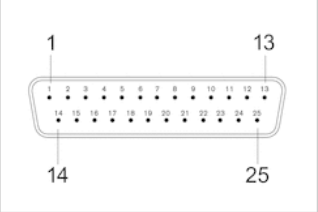

Plug

Pin	1	2	3	4	5	6	7	8	9
Color	white	brown	green	yellow	gray	pink	blue	red	black

10	11	12	13	14	15
violet	gray/pink	red/blue	white/green	brown/green	white/yellow

16	17	18	19	20	21
yellow/brown	white/gray	gray/brown	white/pink	pink/brown	white/blue

22	23	24	25
brown/blue	white/red	brown/red	white/black

Multipole plug, series CON-MP

- Plug D-Sub 25-pin angled 90°
- Socket D-Sub 25-pin angled 90°
- with cable
- UL (Underwriters Laboratories)
- unshielded

Ambient temperature min./max.	-20 ... 80 °C
Operational voltage	24 V DC
Protection class	IP67
Wire cross-section	0.2 mm²
Weight	See table below

The delivered product may vary from that in the illustration.

Technical data

Part No.	Max. current	Number of wires	Cable-Ø	Cable length	Certification	Weight
R412020630	3 A	25	8.5 mm	0.5 m	UL (Underwriters Laboratories)	0.19 kg
R412020631	3 A	25	8.5 mm	1 m	UL (Underwriters Laboratories)	0.26 kg
R412020632	3 A	25	8.5 mm	2 m	UL (Underwriters Laboratories)	0.383 kg
R412020633	3 A	25	8.5 mm	5 m	UL (Underwriters Laboratories)	0.736 kg
R412020634	3 A	25	8.5 mm	10 m	UL (Underwriters Laboratories)	1.4 kg

Technical information

The specified protection class is only valid in assembled and tested state.

Technical information

Material	
Housing	Thermoplastic elastomer
Cable sheath	Polyvinyl chloride

Dimensions

Dimensions

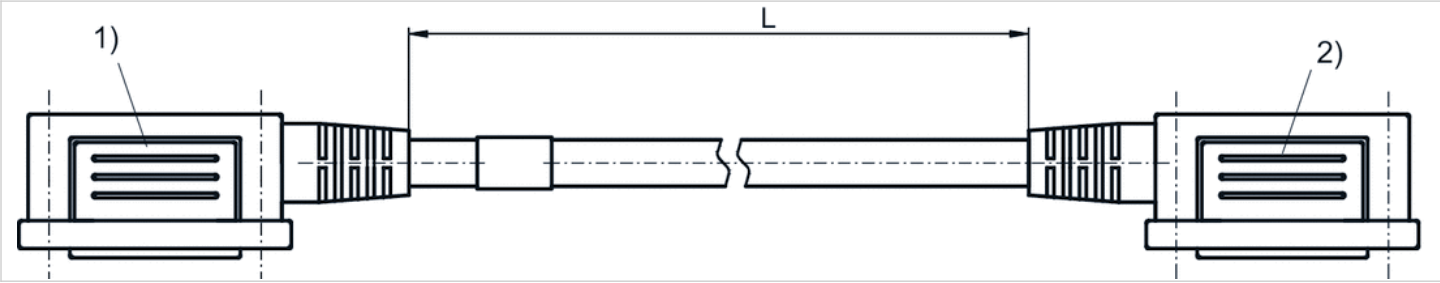

1) Port 1 (Plug)
2) Port 2 (Socket)

Pin assignments

PIN assignment and cable colors, cable identification as per DIN 47100

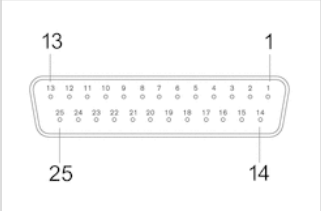

Socket

Pin	1	2	3	4	5	6	7	8	9
Color	white	brown	green	yellow	gray	pink	blue	red	black

10	11	12	13	14	15
violet	gray/pink	red/blue	white/green	brown/green	white/yellow

16	17	18	19	20	21
yellow/brown	white/gray	gray/brown	white/pink	pink/brown	white/blue

22	23	24	25
brown/blue	white/red	brown/red	white/black

Pin assignments

PIN assignment and cable colors, cable identification as per DIN 47100

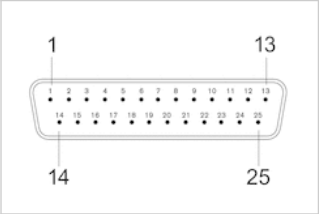

Plug

Pin	1	2	3	4	5	6	7	8	9
Color	white	brown	green	yellow	gray	pink	blue	red	black

10	11	12	13	14	15
violet	gray/pink	red/blue	white/green	brown/green	white/yellow

16	17	18	19	20	21
yellow/brown	white/gray	gray/brown	white/pink	pink/brown	white/blue

22	23	24	25
brown/blue	white/red	brown/red	white/black

Multipole plug, series CON-MP

- open cable ends 44-pin
- with cable
- unshielded

Ambient temperature min./max.	See table below
Operational voltage	24 V DC
Protection class	IP65
Wire cross-section	0.22 mm²
Weight	See table below

Technical data

Part No.	Ambient temperature min./max.	Electrical connection	Max. current	Number of wires
		1		
R419500466	-20 ... 80 °C	Socket D-Sub 44-pin straight 180°	3 A	44
R419500467	-20 ... 80 °C	Socket D-Sub 44-pin straight 180°	3 A	44
R419500468	-20 ... 80 °C	Socket D-Sub 44-pin straight 180°	3 A	44
R419500469	-20 ... 80 °C	Socket D-Sub 44-pin straight 180°	3 A	44
R419500470	-20 ... 80 °C	Socket D-Sub 44-pin straight 180°	3 A	44
R419500471	-20 ... 80 °C	Socket D-Sub 44-pin straight 180°	3 A	44
R419500472	-20 ... 80 °C	Socket D-Sub 44-pin angled 90°	3 A	44
R419500473	-20 ... 80 °C	Socket D-Sub 44-pin angled 90°	3 A	44
R419500474	-20 ... 80 °C	Socket D-Sub 44-pin angled 90°	3 A	44
R419500475	-20 ... 80 °C	Socket D-Sub 44-pin angled 90°	3 A	44
R419500476	-20 ... 80 °C	Socket D-Sub 44-pin angled 90°	3 A	44
R419500477	-25 ... 80 °C	Socket D-Sub 44-pin angled 90°	3 A	44

Part No.	Cable sheath	Bending radius min.	Cable-Ø	Cable length	Weight		Fig.
R419500466	Polyvinyl chloride	-	10.7 mm	3 m	0.632 kg	-	Fig. 1
R419500467	Polyvinyl chloride	-	10.7 mm	5 m	1.013 kg	-	Fig. 1
R419500468	Polyvinyl chloride	-	10.7 mm	10 m	1.934 kg	-	Fig. 1
R419500469	Polyurethane	97.5 mm	13 mm	3 m	0.722 kg	1)	Fig. 1
R419500470	Polyurethane	97.5 mm	13 mm	5 m	1.146 kg	1)	Fig. 1
R419500471	Polyurethane	97.5 mm	13 mm	10 m	2.288 kg	1)	Fig. 1
R419500472	Polyvinyl chloride	-	10.7 mm	3 m	0.61 kg	-	Fig. 2
R419500473	Polyvinyl chloride	-	10.7 mm	5 m	1.001 kg	-	Fig. 2
R419500474	Polyvinyl chloride	-	10.7 mm	10 m	1.913 kg	-	Fig. 2
R419500475	Polyurethane	97.5 mm	13 mm	3 m	0.747 kg	1)	Fig. 2
R419500476	Polyurethane	97.5 mm	13 mm	5 m	1.178 kg	1)	Fig. 2
R419500477	Polyurethane	97.5 mm	13 mm	10 m	2.295 kg	1)	Fig. 2

1) suitable for dynamic laying

Technical information

The specified protection class is only valid in assembled and tested state.

Technical information

Material	
Housing	Thermoplastic elastomer
Cable sheath	Polyvinyl chloride Polyurethane

Dimensions

Fig. 1

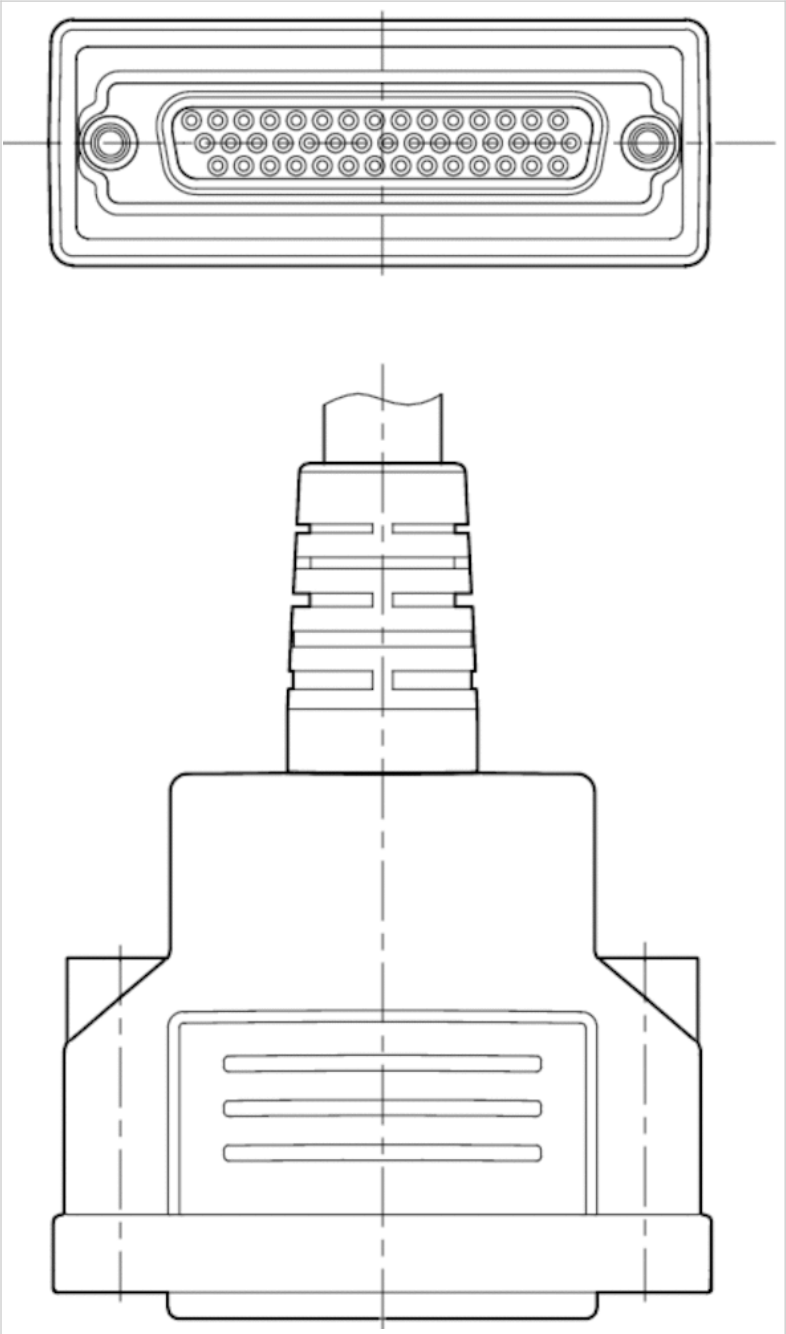

Fig. 2

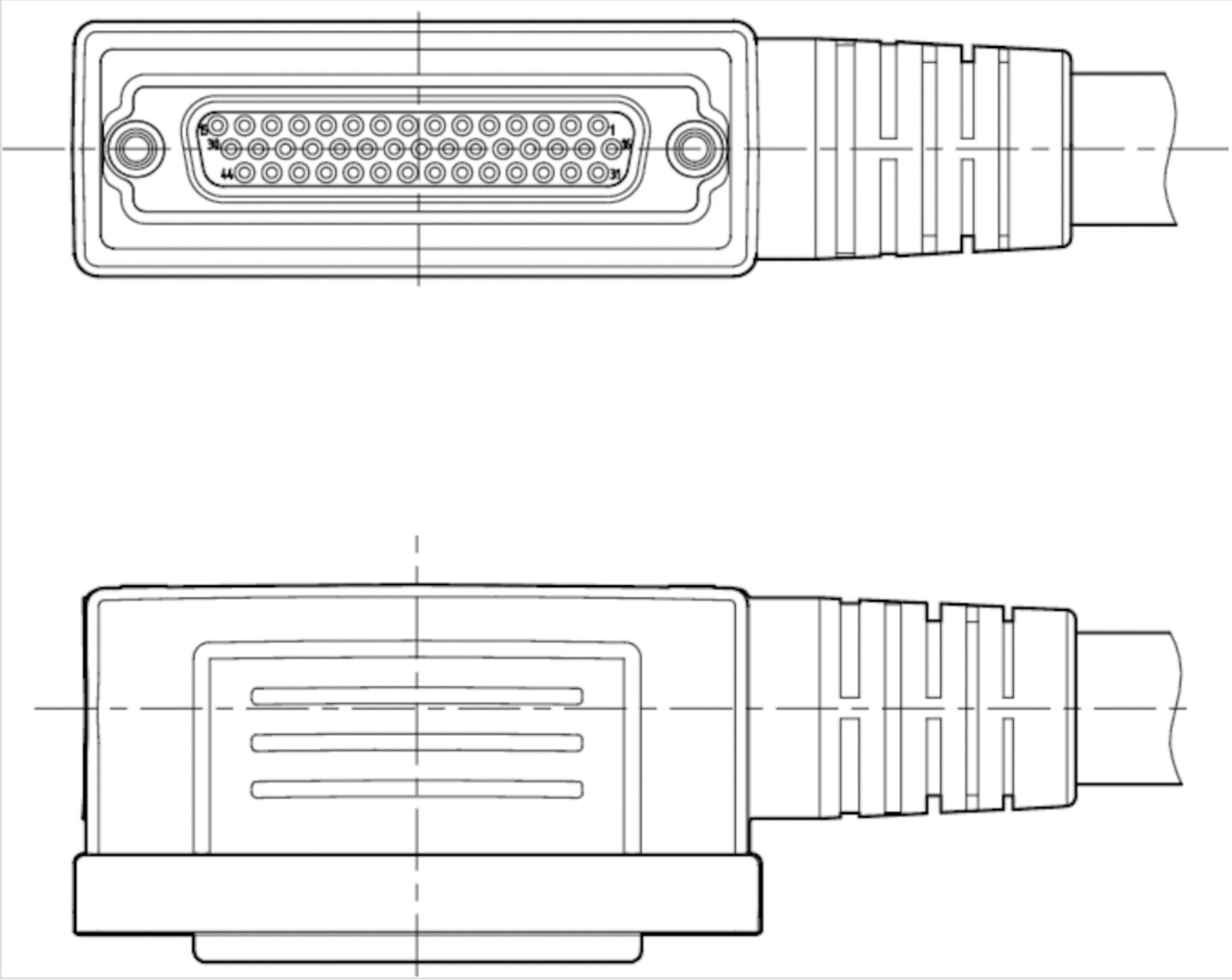

Pin assignments

PIN assignment and cable colors, cable identification as per DIN 47100

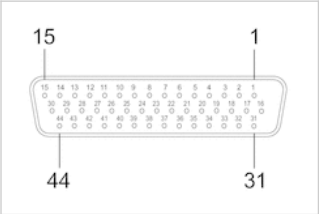

Socket

Pin	1	2	3	4	5	6	7	8	9
Color	white	brown	green	yellow	gray	pink	blue	red	black

10	11	12	13	14	15
violet	gray/pink	red/blue	white/green	brown/green	white/yellow

16	17	18	19	20	21
yellow/brown	white/gray	gray/brown	white/pink	pink/brown	white/blue

22	23	24	25	26	27
brown/blue	white/red	brown/red	white/black	brown/black	gray/green

28	29	30	31	32	33
yellow/gray	pink/green	yellow/pink	green/blue	yellow/blue	green/red

34	35	36	37	38	39	40
yellow/red	gray/black	yellow/black	gray/blue	pink/blue	gray/red	pink/red

41	42	43	44
gray/black	pink/black	blue/black	red/black

Multipole plug, series CON-MP

- open cable ends 25-pin
- with cable
- unshielded

Ambient temperature min./max.	-20 ... 80 °C
Operational voltage	24 V DC
Protection class	IP67
Wire cross-section	0.22 mm²
Weight	See table below

Technical data

Part No.	Electrical connection	Max. current	Number of wires	Cable sheath
	1			
R419500454	Socket D-Sub 25-pin straight 180°	3 A	25	Polyvinyl chloride
R419500455	Socket D-Sub 25-pin straight 180°	3 A	25	Polyvinyl chloride
R419500456	Socket D-Sub 25-pin straight 180°	3 A	25	Polyvinyl chloride
R412022156	Socket D-Sub 25-pin straight 180°	3 A	25	Polyvinyl chloride
R419500457	Socket D-Sub 25-pin straight 180°	3 A	25	Polyurethane
R419500458	Socket D-Sub 25-pin straight 180°	3 A	25	Polyurethane
R419500459	Socket D-Sub 25-pin straight 180°	3 A	25	Polyurethane
R419500460	Socket D-Sub 25-pin angled 90°	3 A	25	Polyvinyl chloride
R419500461	Socket D-Sub 25-pin angled 90°	3 A	25	Polyvinyl chloride
R419500462	Socket D-Sub 25-pin angled 90°	3 A	25	Polyvinyl chloride
R412022352	Socket D-Sub 25-pin angled 90°	3 A	25	Polyvinyl chloride
R419500463	Socket D-Sub 25-pin angled 90°	3 A	25	Polyurethane
R419500464	Socket D-Sub 25-pin angled 90°	3 A	25	Polyurethane
R419500465	Socket D-Sub 25-pin angled 90°	3 A	25	Polyurethane

Part No.	Bending radius min.	Cable-Ø	Cable length	Weight		Fig.
R419500454	-	8.5 mm	3 m	0.465 kg	-	Fig. 1
R419500455	-	8.5 mm	5 m	0.731 kg	-	Fig. 1
R419500456	-	8.5 mm	10 m	1.373 kg	-	Fig. 1
R412022156	-	8.5 mm	15 m	2.002 kg	-	Fig. 1
R419500457	78.75 mm	10.5 mm	3 m	0.51 kg	1)	Fig. 1
R419500458	78.75 mm	10.5 mm	5 m	0.789 kg	1)	Fig. 1
R419500459	78.75 mm	10.5 mm	10 m	1.491 kg	1)	Fig. 1
R419500460	-	8.5 mm	3 m	0.46 kg	-	Fig. 2
R419500461	-	8.5 mm	5 m	0.707 kg	-	Fig. 2
R419500462	-	8.5 mm	10 m	1.334 kg	-	Fig. 2
R412022352	-	8.5 mm	15 m	1.982 kg	-	Fig. 2

Part No.	Bending radius min.	Cable-Ø	Cable length	Weight		Fig.
R419500463	78.75 mm	10.5 mm	3 m	0.484 kg	1)	Fig. 2
R419500464	78.75 mm	10.5 mm	5 m	0.767 kg	1)	Fig. 2
R419500465	78.75 mm	10.5 mm	10 m	1.461 kg	1)	Fig. 2

1) suitable for dynamic laying

Technical information

The specified protection class is only valid in assembled and tested state.
The increased wire cross-section of pin 25 is 0.82 mm².

Technical information

Material	
Housing	Thermoplastic elastomer
Cable sheath	Polyvinyl chloride Polyurethane

Dimensions

Fig. 1

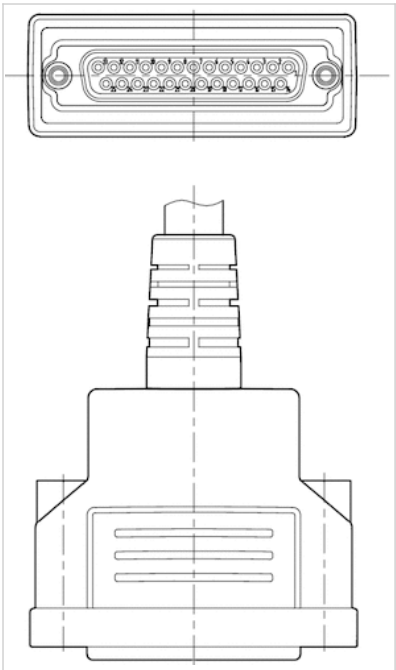

Fig. 2

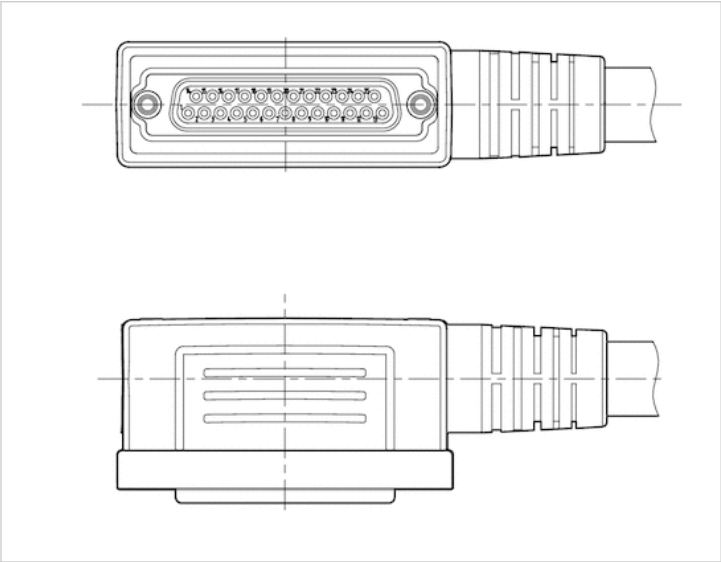

Pin assignments

PIN assignment and cable colors, cable identification as per DIN 47100

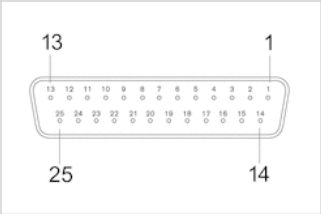

Socket

Pin	1	2	3	4	5	6	7	8	9
Color	white	brown	green	yellow	gray	pink	blue	red	black

10	11	12	13	14	15
violet	gray/pink	red/blue	white/green	brown/green	white/yellow

16	17	18	19	20	21
yellow/brown	white/gray	gray/brown	white/pink	pink/brown	white/blue

22	23	24	25
brown/blue	white/red	brown/red	white/black

Efficient pneumatic solutions, our program: cylinders and drives, valves and valve systems, air supply management

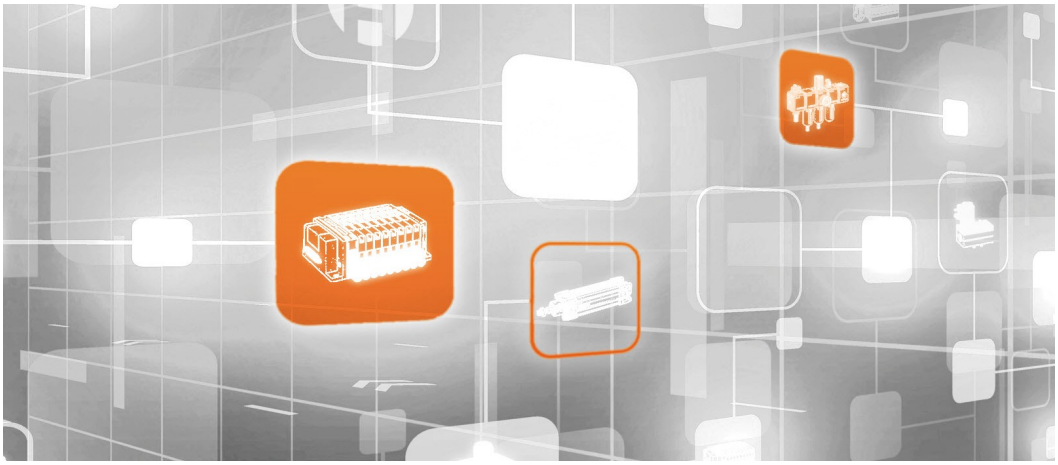

Visit us: Emerson.com/Aventics

Your local contact: Emerson.com/contactus

Emerson.com

Facebook.com/EmersonAutomationSolutions

LinkedIn.com/company/Emerson-Automation-Solutions

Twitter.com/EMR_Automation

2023-02-22

EMERSON

CONSIDER IT SOLVED™