NOTES:

1. CARRIER REGULATOR PANEL VARIES WITH APPLICATION (1,2,3 OR 4 REGULATORS).
2. ENTRIES FOR I/O (ETHERNET, FLOW SWITCH WIRING, ETC.)

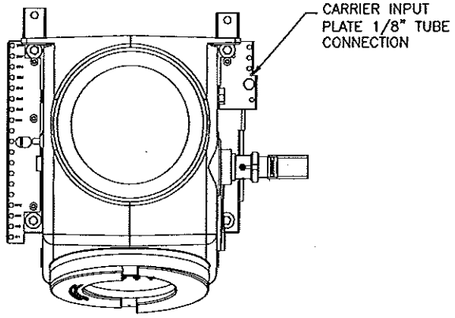

TOP VIEW FLOOR MOUNT UNIT

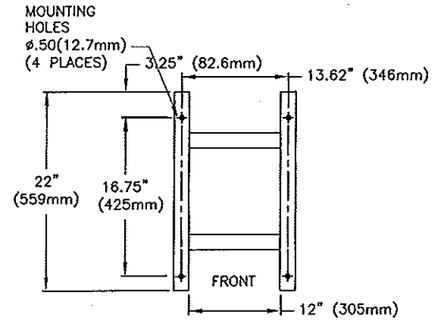

FOOT PATTERN

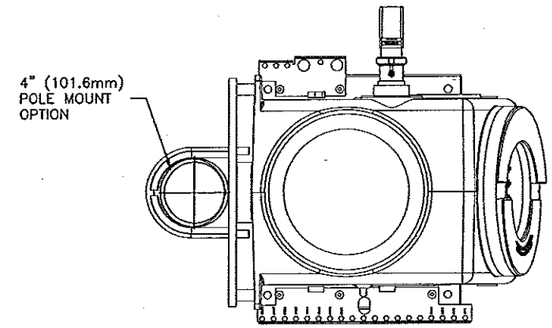

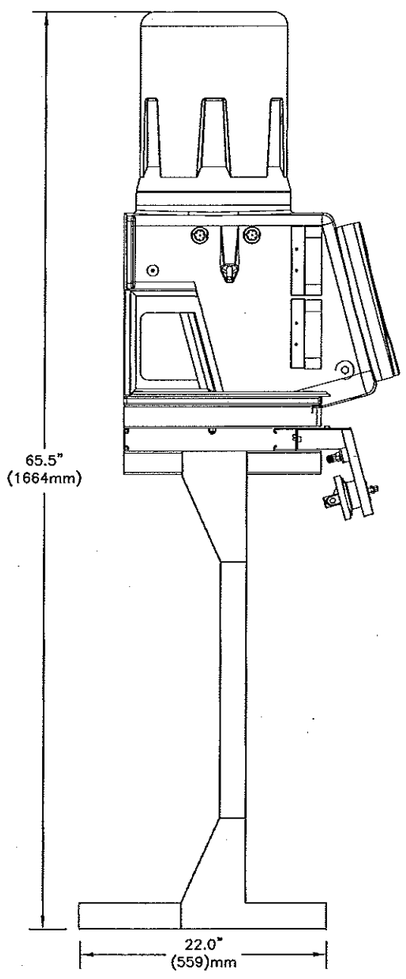

SIDE VIEW FLOOR MOUNT UNIT

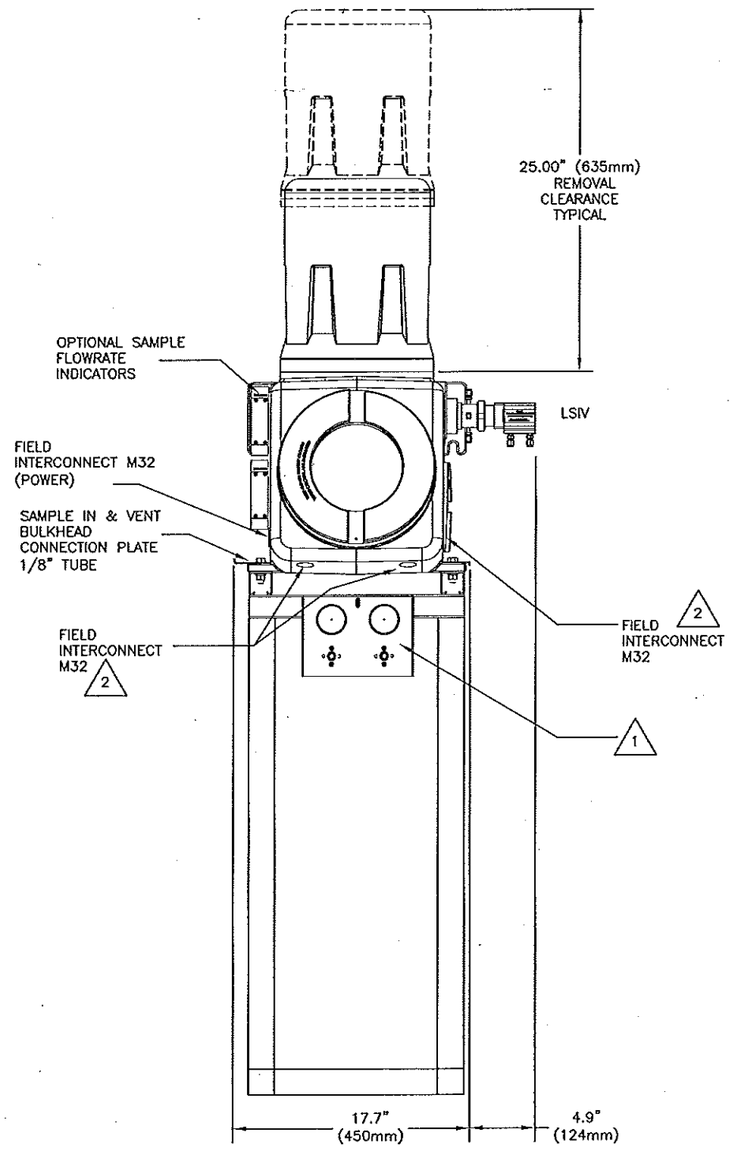

FRONT VIEW FLOOR MOUNT UNIT

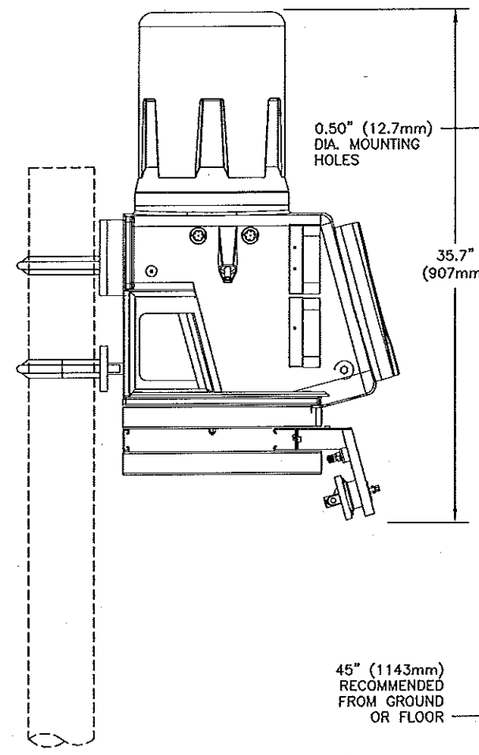

PIPE MOUNT SIDE VIEW

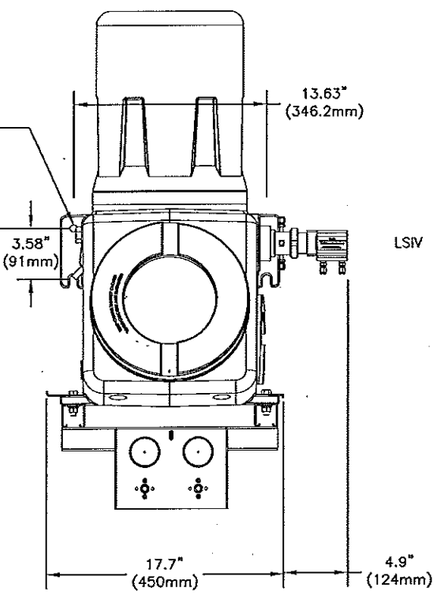

WALL MOUNT FRONT VIEW

SI METRIC						
THIRD ANGLE PROJECTION						
MATERIAL N/A	B	06/23/10	DLT	ECO-XX-5005738	EM	DLT
FINISH N/A	A	05/28/10	HM	RELEASED	DLT	LF
PROJ. FILE NO. - NONE	REV	DATE	DRN	DESCRIPTION	CHKD	APPD

FILENAME: DE22050-001B1.dwg, DATE: 06-23-10, TIME: 1:45 P.M.

THIS DRAWING IN DESIGN AND DETAIL IS OUR PROPERTY AND MUST NOT BE USED EXCEPT IN CONNECTION WITH OUR WORK. IT SHALL NOT BE REPRODUCED AND SHALL BE RETURNED TO US ON DEMAND. ALL RIGHTS ARE RESERVED.

GEOMETRIC TOLERANCES & DIMENSIONS PER ANSI Y14.5 LATEST REVISION

UNLESS OTHERWISE NOTED ALL DIMENSIONS IN INCHES
X.XX ±.015
X.XXX ±.005
ANGULAR ±0° 30'
FINISH 200 RA MAX

BREAK ALL SHARP CORNERS TO .003-.015 RADIUS AND REMOVE ALL BURRS

EMERSON. Process Management

TITLE: OUTLINE & DIMENSIONAL MODEL 700XA G.C WITH LSIV

DRN MANCHA	DATE 5/28/10	DWG NO. DE-22050-001	REV B
CHKD DLT	DATE 05/28/10		
APPD LF	DATE 05/28/10	SCALE NTS P/N N/A	SHT 1 OF 1