Product Data Sheet
October 2018
211-37-520, Rev L

Paine™ 211-37-520 Series Pressure Transducer

mV/V, Downhole, HP/HT, +204 °C, Ranges to 30,000 PSIA (2,068 BAR)

The Paine™ 211-37-520 Series is our High Pressure/High Temperature (HP/HT) combination transducer designed for 400 °F (204 °C) offshore oil, gas, and power industry requirements. The Paine 211-37-520 Series, based on its small size, all-welded construction, and ability to perform in corrosive environments, is the best solution for new downhole tool and process equipment design when temperatures are going to reach 400 °F (204 °C).

Many new exciting industries are now using the Paine 211-37-520 Series because of its rugged construction, accuracy, stability, and long term repeatability.

EMERSON

Solutions

- High pressure and high temperature measurement
- All-welded, sealed construction
- Harsh/extreme environment ready

Potential applications

- Wireline and rotary steering tools
- Hydraulic flow pressure and temperature monitoring
- Oil and gas exploration and production
- MWD, PWD, and LWD tools

Features

- **Full Scale (F.S.) sensitivity:** 2.6 mV/V nominal
- **Total error band (non-linearity, hysteresis, and thermal effects):** ±0.75% F.S.
- **Output:** mV/V
- **Operating temperature:** –40 to +400 °F (–40 to +204 °C)
- **Pressure range:** 0–5,000 to 0–30,000 psia (344 to 2,068 bar)
- **Operating media:** Compatible with alloy UNS NO7718 solution annealed and aged to a minimum hardness of 40HRC.
- **Pressure fitting:** Per MS33656-E3

Specifications

Calibration: Calibration certificates are supplied with each unit and available online.

Performance

Full Scale (F.S.) sensitivity: 2.6 mV/V nominal

Total error band (non-linearity, hysteresis, and thermal effects): ±0.75% F.S.

Non-linearity and hysteresis combined: ±0.150% of F.S. maximum (BSLM)

Output at zero pressure: 0 ± 2.0% F.S.

Platinum resistance temperature detector (RTD): 0 °C, 1000 Ω ± 0.06% Ω to IEC 751, Class A, Alpha = 0.00385 nominal

Sustained pressure/temperature stability: When pressurized to F.S. pressure at 350 °F, F.S. output will not shift more than 0.05% F.S. in 14 days nor more than ± 0.07% F.S. in 60 days.

Compensated: This sensor compensated for temperature effects on signal.

Environmental

Environmental: Error due to combined effect of shock, vibration and acceleration shall be less than 0.01% of F.S.O. per G.

Operating temperature range: –40 to +400 °F (–40 to +204 °C)

Compensated temperature range: +75 to +350 °F (+23 to +176 °C)

Contents

Mechanical

Pressure range: Contact factory for additional pressure ranges.

Table 1. Pressure Table

Standard part number	Pressure range PSIA (BAR)	Proof pressure PSIA (BAR)	Burst pressure PSIA (BAR)	Replaceable seal part number
211-37-520-01	0–5,000 (0–344)	7,500 (517)	10,000 (689)	247-99-250-01
211-37-520-02	0–10,000 (0–689)	15,000 (1,034)	20,000 (1,378)	247-99-250-01
211-37-520-03	0–15,000 (0–1034)	18,750 (1,292)	22,500 (1,551)	247-99-250-01
211-37-520-04	0–20,000 (0–1378)	25,000 (1,723)	30,000 (2,068)	247-99-250-01
211-37-520-05	0–22,500 (0–1551)	28,125 (1,939)	30,000 (2,068)	247-99-250-01
211-37-520-06	0–25,000 (0–1723)	31,250 (2,154)	33,000 (2,275)	247-99-250-01
211-37-520-07	0–30,000 (0–2068)	37,500 (2,585)	40,000 (2,757)	247-99-250-02

External case pressure: Up to 20,000 psi (1,378 bar)

Pressure media: Any compatible with alloy UNS NO7718 solution annealed and aged to a minimum hardness of 40HRC.

Pressure fitting: Per MS33656-E3

Installation information: Mount on port using annealed alloy 600 replaceable seal. Thermal coefficient of the mounting expansion should not exceed 8.3 x 10^{-6} in/in °F for operation above 100 °C.

Recommended installation torque: 125–150 in-lb (14–17 Nm)

Electrical

Excitation: 1 to 20 VDC (10 VDC nominal)

Input resistance: 1500 ± 300 Ω

Output resistance: 1500 ± 150 Ω

Insulation resistance: All conductors together to case, 10 GΩ minimum at 50 VDC and +77 °F (+25 °C)

Electrical connections: High temperature solderable pins

Dimensional drawings

Figure 1. Paine 211-37-520 Series

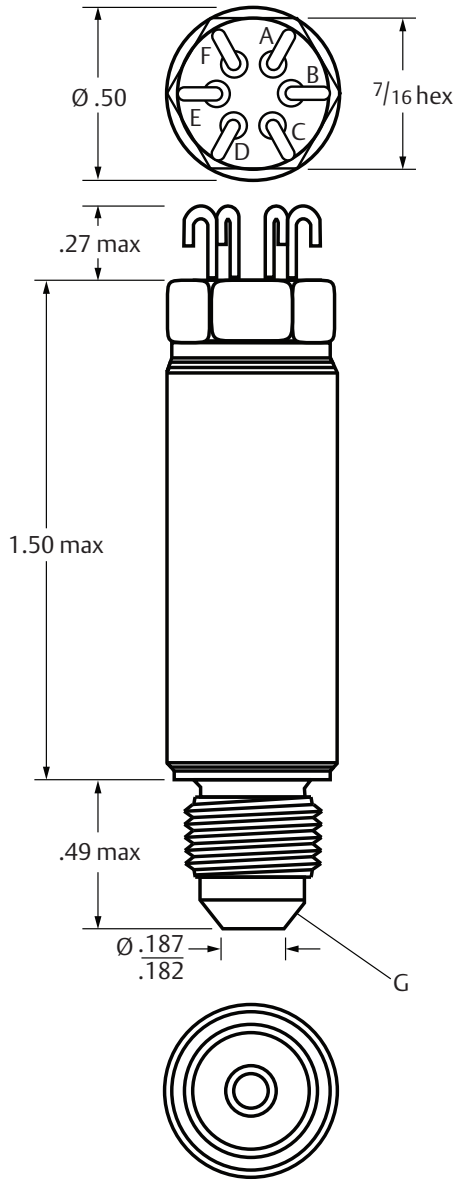

A–F. See connections table
G. Fitting end per MS33656-E3
Dimensions are shown in inches.

Connections	
PIN	**Function**
A	+ Excitation
B	+ Signal
C	- Signal
D	- Excitation
E	R.T.D.
F	R.T.D.

This page is intentionally left blank.

Linkedin.com/company/Emerson-Automation-Solutions

Twitter.com/Rosemount_News

Facebook.com/Rosemount

Youtube.com/user/RosemountMeasurement

Google.com/+RosemountMeasurement

Rosemount Specialty Product LLC
Emerson Automation Solutions
5545 Nelpar Drive
East Wenatchee, WA 98822, USA
+1 509 881 2100
+1 509 881 2115
Paine.Products@Emerson.com

PAINE™

EMERSON™