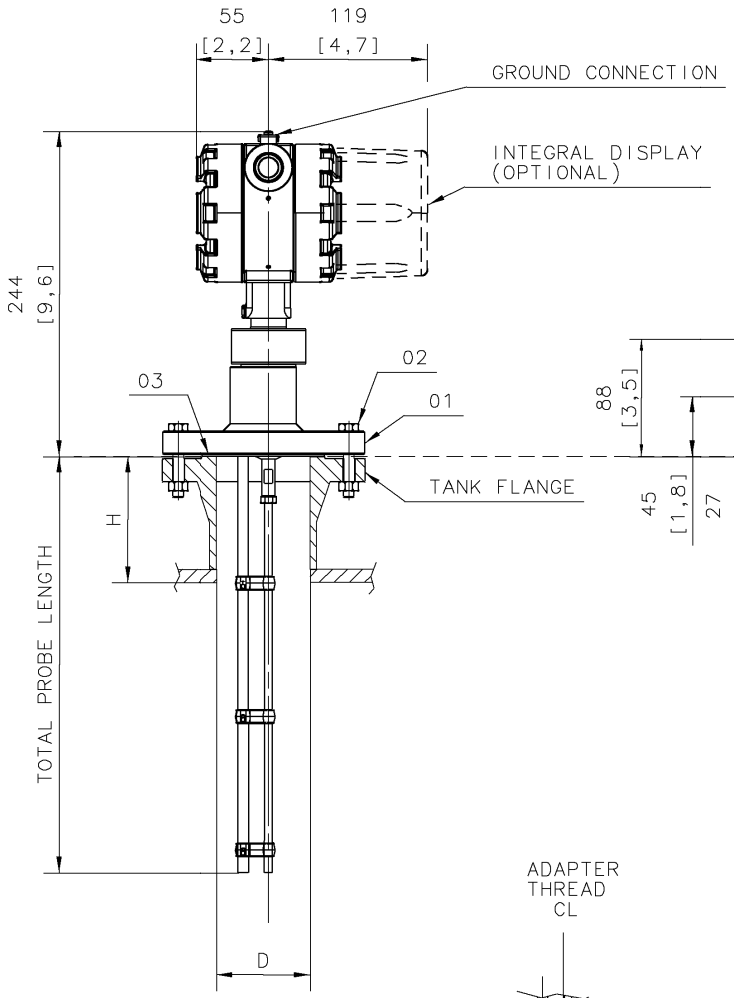

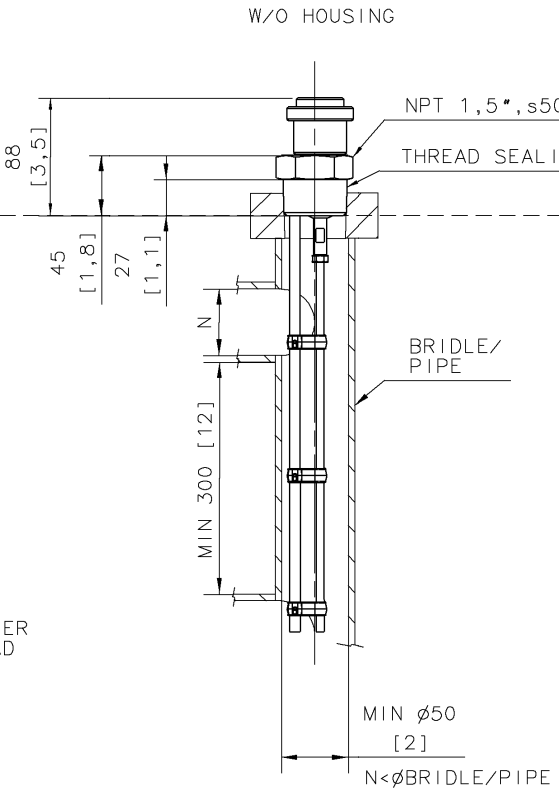

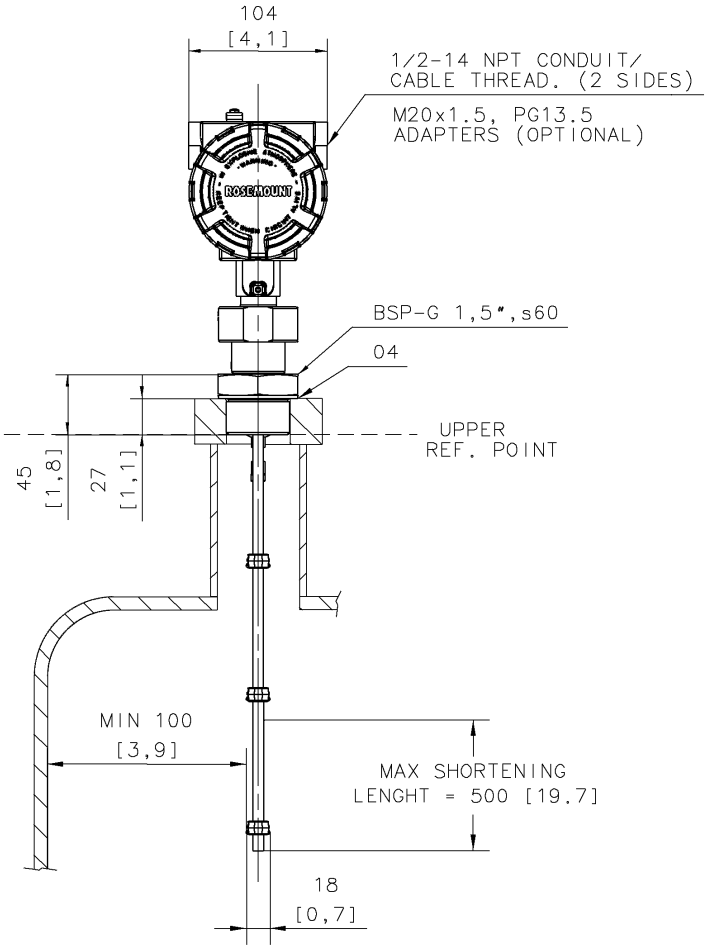

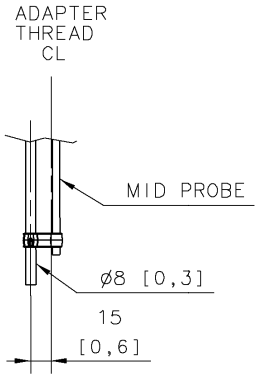

RECOMMENDED D>100 [4].
MIN. D=50 [2] REQUIRES
SPECIAL CONFIG. SETTINGS.

MAX REC. H<(D+100) [D+4].

DEPENDING ON TURBULENCE IN TANK
AND MOUNTING ANGLE THE PROBE MAY
NEED TO BE ANCHORED OR SUPPORTED.

ENSURE MID PROBE HAS NO CONTACT
TO WALL. MIN DISTANCE 15 [0,6].

FOR MORE INFO. SEE
REFERENCE MANUAL

(1) P/T-RATING FOR FLANGE; SEE REF. MANUAL.

POS	ITEM DESCRIPTION	QTY	REMARK	SUPPLIER
04	GASKET	1	ACC. TO BSP-G THREAD STD.	CUSTOMER
03	GASKET	1	SOFT GASKET T=MIN 1.6 (ANSI B16.5/IA, EN1514-1/IBC) SEE NOTE 1	CUSTOMER
02	SCREW/NUT/WASHER	-	ACC. TO FLANGE STD. SEE NOTE 1.	CUSTOMER
01	FLANGE	1	DIM. ACC. TO ANSI B 16.5/ EN 1092-1. OTHER ON REQUEST. P/T-RATING SEE NOTE 1.	RMT

ISSUED BY	WEEK	PRODUCT CODE	FILE	INSTALLATION DRAWING TITLE
GU-TK-RS	0217	3300	IDEAS	MECHANICAL INSTALLATION DWG RIGID TWIN LEAD, SERIES 3300
APPROVED BY	WEEK	ORIGINAL DWG NO.	SCALE	
GU-HF	0217	9150077-970	1:4	

ROSEMOUNT® 1 ST ANGLE

DOC TYPE	DWG NO.	ISSUE	SHEET
2	9150077-970	3	01/01

THE COPYRIGHT/OWNERSHIP OF THIS DOCUMENT IS AND WILL REMAIN OURS. THE DOCUMENT MUST NOT BE USED WITHOUT OUR AUTHORIZATION OR BROUGHT TO THE KNOWLEDGE OF A THIRD PARTY. CONTRAVENTION WILL BE PROSECUTED. ROSEMOUNT TANK RADAR AB, SWEDEN.